This document, together with the concepts and designs presented herein, as an instrument of service, is intended only for the specific purpose and client for which it was prepared. Reuse of and improper reliance on this document without written authorization and adaptation by Kimley-Horn and Associates, Inc. shall be without liability to Kimley-Horn and Associates, Inc.

CONDUIT RUN EXPOSED

CONDUIT RUN CONCEALED UNDERGROUND

CONDUIT RUN CONCEALED IN FLOOR OR SLAB

G — GROUNDING ELECTRODE CONDUCTOR

CONDUIT STUB OUT AND CAP

GROUND ROD

JUNCTION BOX

JUNCTION BOX WITH FLEXIBLE CONNECTION

480V
15 KVA, 1*
120/240V

TRANSFORMER, 480V INDICATED PRIMARY VOLTAGE, 120/240V INDICATES SECONDARY VOLTAGE, 15 KVA REPRESENTS POWER RATING, AND 1* INDICATES SINGLE PHASE (THREE PHASE IF NOT INDICATED)

3P
30A

THERMAL MAGNETIC CIRCUIT BREAKER WITH NUMBER OF POLES AND AMPERE RATING

XX

COMBINATION MAGNETIC STARTER WITH CONTROL POWER TRANSFORMER (SIZED FOR LOAD). LETTERS INDICATE TYPE :
N – NON-REVERSING
R – REVERSING
2S – TWO-SPEED
C – CONTACTOR
SS – SOLID STATE SOFT START

XXX

XXX DEVICE	DESCRIPTION
HLS	HIGH LEVEL SWITCH
HOA	HAND-OFF-AUTO
LD	LEAK DETECTION
LLS	LOW LEVEL SWITCH
LOR	LOCAL-OFF-REMOTE
PB	PUSH BUTTON
RTU	REMOTE TERMINAL UNIT
SS	SOFT STARTER
SS/B	SOFT START OR BYPASS
TS	TEMPERATURE SWITCH
TVSS	TRANSIENT VOLTAGE SURGE SUPPRESSOR
ZS	POSTION SENSOR (LIMIT SWITCH)

FUSE

XX

MOTOR

THERMAL OVERLOAD

UTILITY METER

TRANSFER SWITCH

ELECTRIC PANELBOARD

DISCONNECT OR SAFETY SWITCH

CHAIN HUNG 8' INDUSTRIAL FLUORESCENT LIGHTING FIXTURE. REFER TO FIXTURE SCHEDULE.

$ SINGLE POLE SWITCH, 20A, 120/277V. MOUNT 44" AFF OR AS NOTED.

DUPLEX RECEPTACLE, 20A 125VAC. MOUNT 18" AFF OR AS NOTED.

LB CONDUIT BODY/FITTING.

HOME RUN TO PANELBOARD. CIRCUIT(S) AS INDICATED.

WIRES INDICATED AS FOLLOWS :

TWO WIRES:

THREE WIRES:

FOUR WIRES ETC:
NEUTRAL WIRE
ISOLATED GROUND WIRE

OVIDE 2-#12 THWN CU IN 1/2" C. UNLESS OTHERWISE NOTED, AND GROUND WIRE (NOT INDICATED) IN ALL POWER AND LIGHTING RACEWAYS.

FIELD WIRING

FLOAT SWITCH. OPENS ON LOW LEVEL.

FLOAT SWITCH. CLOSES ON LOW LEVEL.

NORMALLY OPEN (N.O.) CONTACT

NORMALLY CLOSED (N.C.) CONTACT

FUSE

GROUND CONNECTION

R

INDICATING PILOT LIGHT LETTER INDICATES COLOR OF LENS

DISCONNECT OR TOGGLE SWITCH

NORMALLY OPEN MOMENTARY CIRCUIT CLOSING PUSH-BUTTON SWITCH SPRING OPEN. NUMBER OF ELECTRICAL CONTACTS ON SWITCH SHOWN ON CONTROL SCHEMATIC

NORMALLY CLOSED MOMENTARY CIRCUIT OPENING PUSH-BUTTON SWITCH SPRING CLOSE. NUMBER OF ELECTRICAL CONTACTS ON SWITCH SHOWN ON CONTROL SCHEMATIC

LIMIT SWITCH NORMALLY CLOSED CONTACT CONTACT OPENS WHEN ACTUATED

TORQUE SWITCH NORMALLY CLOSED CONTACT CONTACT OPENS WHEN ACTUATED

PUMP THERMAL SENSOR

FAN THERMOSTAT

ABBREVIATIONS:

A	AMPS
AFF	ABOVE FINISHED FLOOR
AFG	ABOVE FINISHED GRADE
C	CONDUIT
EXIST	EXISTING
ELEC	ELECTRICAL
GFI	GROUND FAULT INTERRUPTER
GND	GROUNDING CONDUCTOR
HP	HORSEPOWER
HZ	HERTZ
IG	ISOLATED GROUND
KVA	KILOVOLT AMPERES
KW	KILOWATTS
MAX	MAXIMUM
MIN	MINIMUM
N/A	NOT APPLICABLE
PH	PHASE
RECP	RECEPTACLE
RPM	REVOLUTIONS PER MINUTE
RTU	REMOTE TERMINAL UNIT
TYP	TYPICAL
V	VOLTS
WP	WEATHERPROOF

EXAMPLE OF SECTION CUT AND DETAIL

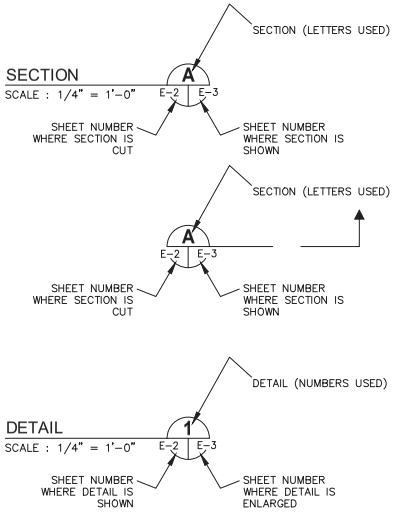

THOMAS ENGINEERING
777 S Harbour Island Blvd, STE 350, TAMPA, FL 33602
813.227.9160
Certificate of Authorization No. 00031028

No.	REVISIONS	DATE	BY

Kimley»Horn
© 2023 KIMLEY-HORN AND ASSOCIATES, INC.
109 SOUTH KENTUCKY AVENUE, LAKELAND, FL 33801
PHONE: 863-667-2091 FAX: 863-667-2092
WWW.KIMLEY-HORN.COM REGISTRY NO. 35106

LICENSED PROFESSIONAL
TIMOTHY THOMAS, P.E.
FLORIDA LICENSE NUMBER 47079
DATE 05/19/2023

KHA PROJECT 046440021
DATE 5-19-2023
SCALE AS SHOWN
DESIGNED BY TDT
DRAWN BY JLT
CHECKED BY GLW

ELECTRICAL LEGEND AND ABBREVIATIONS

GLENDWOOD AND CRYSTAL LAKE WTP CONTROL PANEL IMPROVEMENTS
PREPARED FOR
AVON PARK
AVON PARK FL

SHEET NUMBER
E-1

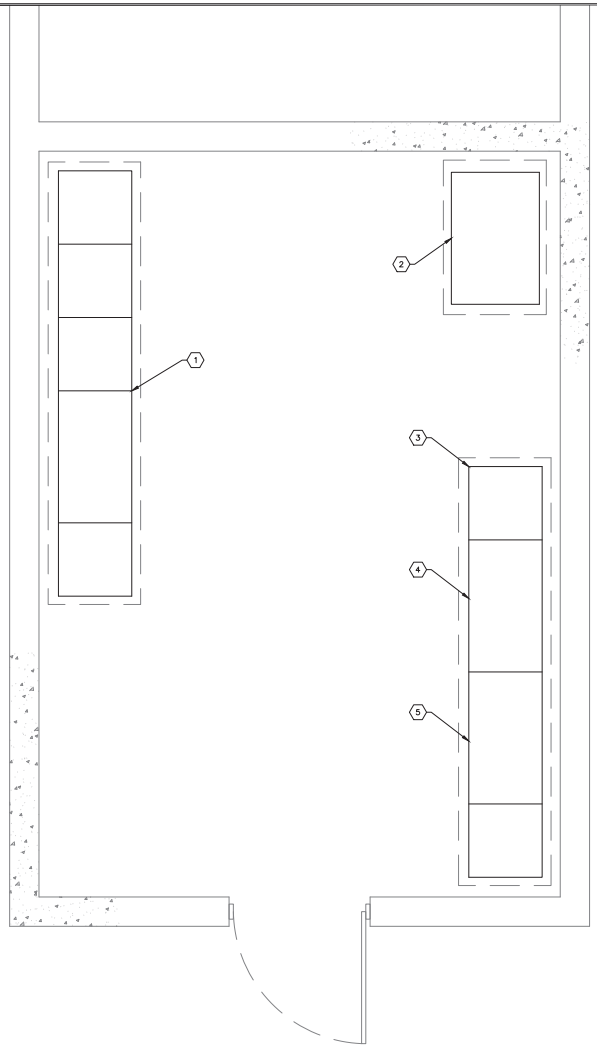

GLENWOOD WTP ELECTRICAL ROOM PLAN
SCALE: NOT TO SCALE

KEYED NOTES:

1. EXISTING MCC 'A'. NO WORK REQUIRED.
2. EXISTING GLENWOOD WTP CONTROL PANEL. REFER TO SHEETS E-3 TO E-10 FOR REQUIRED MODIFICATIONS.
3. EXISTING MCC 'B'.
4. EXISTING HIGH SERVICE PUMP #1 VARIABLE FREQUENCY DRIVE (VFD) CUBICLE. CONTRACTOR SHALL REPLACE EXISTING HP VFD WITH NEW 60 HP VFD. REFER ALSO TO VFD SPECIFICATION 16370.
5. EXISTING HIGH SERVICE PUMP #2 VARIABLE FREQUENCY DRIVE (VFD) CUBICLE. CONTRACTOR SHALL REPLACE EXISTING HP VFD WITH NEW 60 HP VFD. REFER ALSO TO VFD SPECIFICATION 16370.

THOMAS ENGINEERING
777 S Harbour Island Blvd, STE 350, TAMPA, FL 33602
813.227.0150
Certificate of Authorization No. 00031028

No.	REVISIONS	DATE	BY

Kimley»Horn
© 2023 KIMLEY-HORN AND ASSOCIATES, INC.
109 SOUTH KENTUCKY AVENUE, LAKELAND, FL 33801
PHONE: 863-667-2091 FAX: 863-667-2092
WWW.KIMLEY-HORN.COM REGISTRY NO. 35106

LICENSED PROFESSIONAL
TIMOTHY THOMAS, P.E.
FLORIDA LICENSE NUMBER 47079
DATE 05/19/2023

KHA PROJECT 046440021
DATE 5-19-2023
SCALE AS SHOWN
DESIGNED BY TDT
DRAWN BY JLT
CHECKED BY GLW

GLENWOOD WTP ELECTRICAL ROOM PLAN

GLENDWOOD AND CRYSTAL LAKE WTP CONTROL PANEL IMPROVEMENTS
PREPARED FOR
AVON PARK
AVON PARK FL

SHEET NUMBER
E-2

This document, together with the concepts and designs presented herein, as an instrument of service, is intended only for the specific purpose and client for which it was prepared. Reuse of and improper reliance on this document without written authorization and adaptation by Kimley-Horn and Associates, Inc. shall be without liability to Kimley-Horn and Associates, Inc.

This document, together with the concepts and designs presented herein, as an instrument of service, is intended only for the specific purpose and client for which it was prepared. Reuse of and improper reliance on this document without written authorization and adaptation by Kimley-Horn and Associates, Inc. shall be without liability to Kimley-Horn and Associates, Inc.

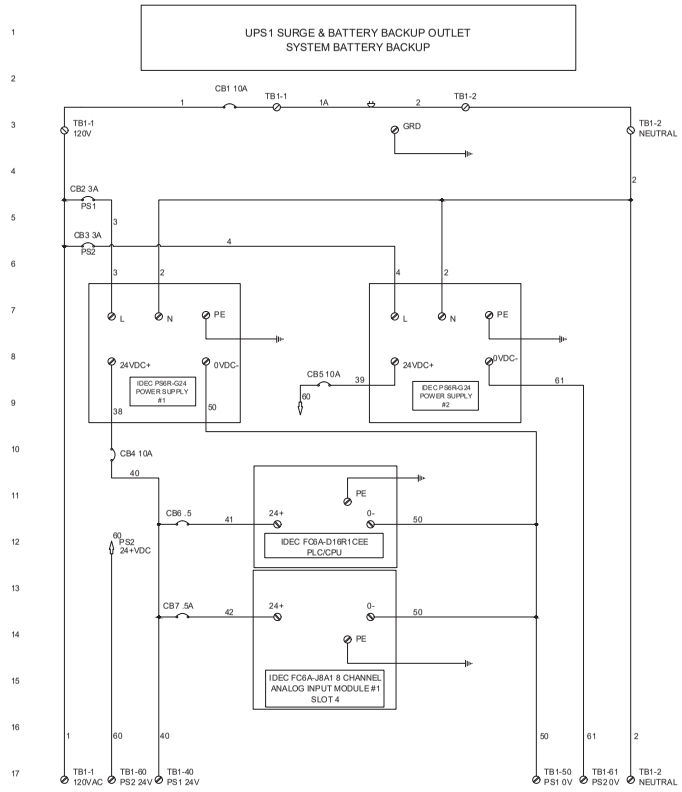

CONTINUED ABOVE RIGHT

CONTINUED FROM BELOW LEFT

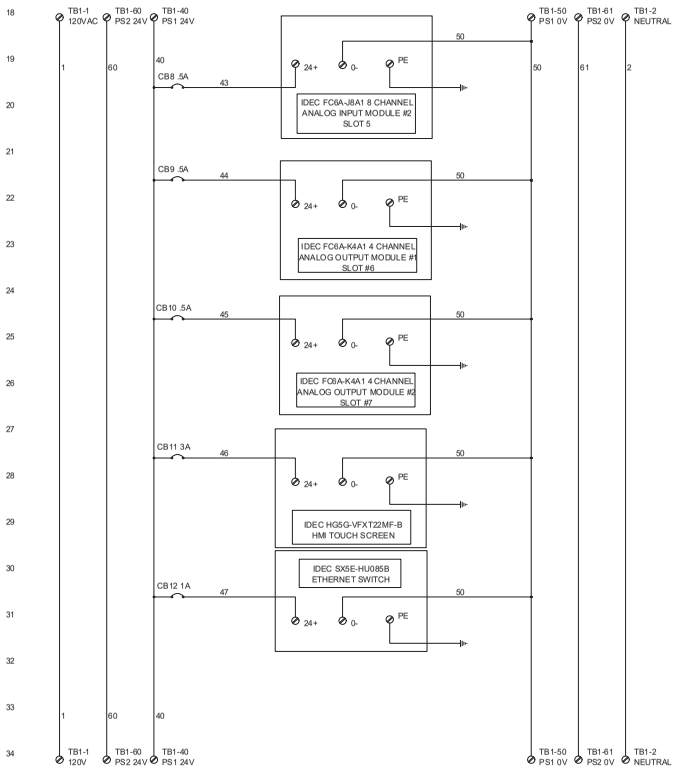

CONTINUED ON SHEET E-4

THOMAS ENGINEERING
777 S Harbour Island Blvd, STE 350, TAMPA, FL 33602
813.227.9160
Certificate of Authorization No. 00031028

No.	REVISIONS	DATE	BY

Kimley»Horn
© 2023 KIMLEY-HORN AND ASSOCIATES, INC.
109 SOUTH KENTUCKY AVENUE, LAKELAND, FL 33801
PHONE: 863-667-2091 FAX: 863-667-2092
WWW.KIMLEY-HORN.COM REGISTRY NO. 35106

LICENSED PROFESSIONAL
TIMOTHY THOMAS, P.E.
FLORIDA LICENSE NUMBER 47079
DATE 05/19/2023

KHA PROJECT 046440021
DATE 5-19-2023
SCALE AS SHOWN
DESIGNED BY TDT
DRAWN BY JLT
CHECKED BY GLW

GLENWOOD WTP PANEL WIRING SCHEMATICS (SHEET 1 OF 8)

GLENDWOOD AND CRYSTAL LAKE WTP CONTROL PANEL IMPROVEMENTS
PREPARED FOR
AVON PARK
AVON PARK FL

SHEET NUMBER
E-3

This document, together with the concepts and designs presented herein, as an instrument of service, is intended only for the specific purpose and client for which it was prepared. Reuse of and improper reliance on this document without written authorization and adaptation by Kimley-Horn and Associates, Inc. shall be without liability to Kimley-Horn and Associates, Inc.

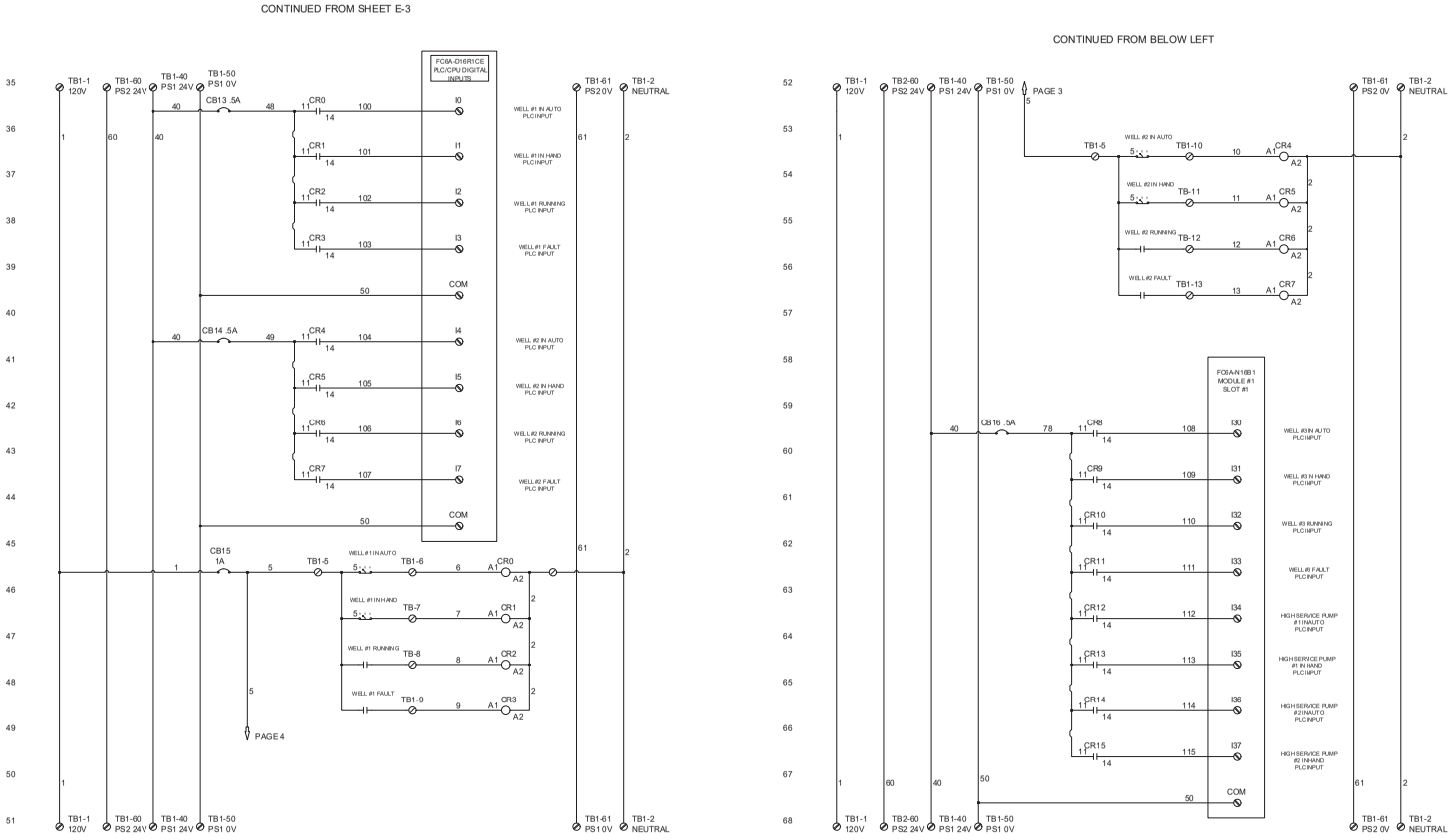

THOMAS ENGINEERING
777 S Harbour Island Blvd, STE 350, TAMPA, FL 33602
813.227.9190
Certificate of Authorization No. 00031028

No.	REVISIONS	DATE	BY

Kimley»Horn
© ####, KIMLEY-HORN AND ASSOCIATES, INC.
109 SOUTH KENTUCKY AVENUE, LAKELAND, FL 33801
PHONE: 863-667-2091 FAX: 863-667-2092
WWW.KIMLEY-HORN.COM REGISTRY NO. 35106

LICENSED PROFESSIONAL
TIMOTHY THOMAS, P.E.
FLORIDA LICENSE NUMBER 47079
DATE 05/19/2023

KHA PROJECT 046440021
DATE 5-19-2023
SCALE AS SHOWN
DESIGNED BY TDT
DRAWN BY JLT
CHECKED BY GLW

GLENWOOD WTP PANEL WIRING SCHEMATICS (SHEET 2 OF 8)

GLENDWOOD AND CRYSTAL LAKE WTP CONTROL PANEL IMPROVEMENTS
PREPARED FOR
AVON PARK
AVON PARK FL

SHEET NUMBER
E-4

This document, together with the concepts and designs presented herein, as an instrument of service, is intended only for the specific purpose and client for which it was prepared. Reuse of and improper reliance on this document without written authorization and adaptation by Kimley-Horn and Associates, Inc. shall be without liability to Kimley-Horn and Associates, Inc.

CONTINUED FROM SHEET E-4

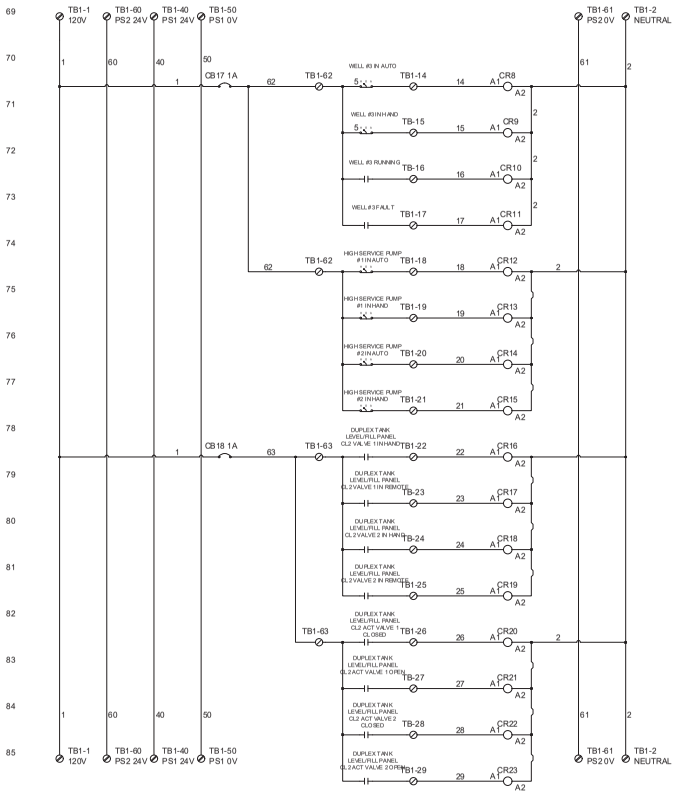

CONTINUED ABOVE RIGHT

CONTINUED FROM BELOW LEFT

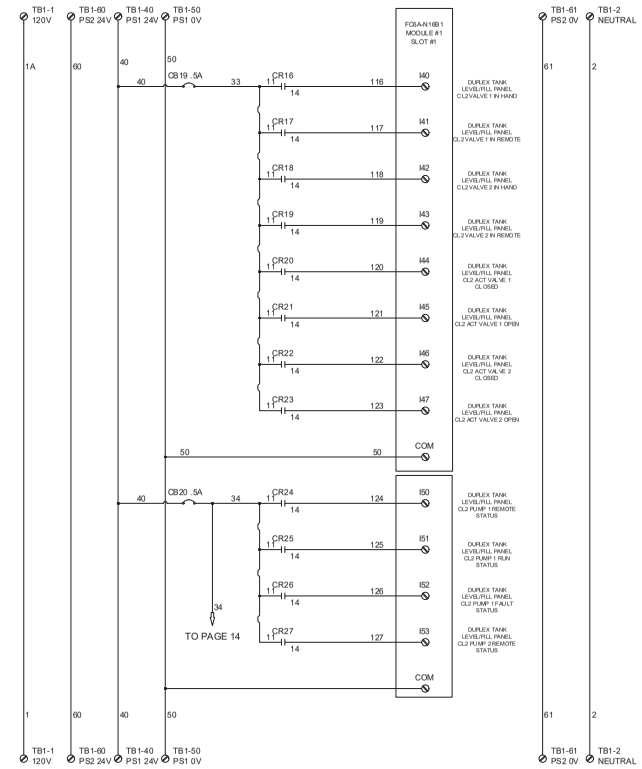

CONTINUED ON SHEET E-6

THOMAS ENGINEERING
777 S Harbour Island Blvd, STE 350, TAMPA, FL 33602
813 227 9150
Certificate of Authorization No. 00031028

No.	REVISIONS	DATE	BY

Kimley»Horn
© ####, KIMLEY-HORN AND ASSOCIATES, INC.
109 SOUTH KENTUCKY AVENUE, LAKELAND, FL 33801
PHONE: 863-667-2091
WWW.KIMLEY-HORN.COM REGISTRY NO. 35106

LICENSED PROFESSIONAL
TIMOTHY THOMAS, P.E.
FLORIDA LICENSE NUMBER 47079
DATE 05/19/2023

KHA PROJECT 046440021
DATE 5-19-2023
SCALE AS SHOWN
DESIGNED BY TDT
DRAWN BY JLT
CHECKED BY GLW

GLENWOOD WTP PANEL WIRING SCHEMATICS (SHEET 3 OF 8)

GLENDWOOD AND CRYSTAL LAKE WTP CONTROL PANEL IMPROVEMENTS
PREPARED FOR
AVON PARK
AVON PARK FL

SHEET NUMBER
E-5

This document, together with the concepts and designs presented herein, as an instrument of service, is intended only for the specific purpose and client for which it was prepared. Reuse of and improper reliance on this document without written authorization and adaptation by Kimley-Horn and Associates, Inc. shall be without liability to Kimley-Horn and Associates, Inc.

CONTINUED FROM SHEET E-5

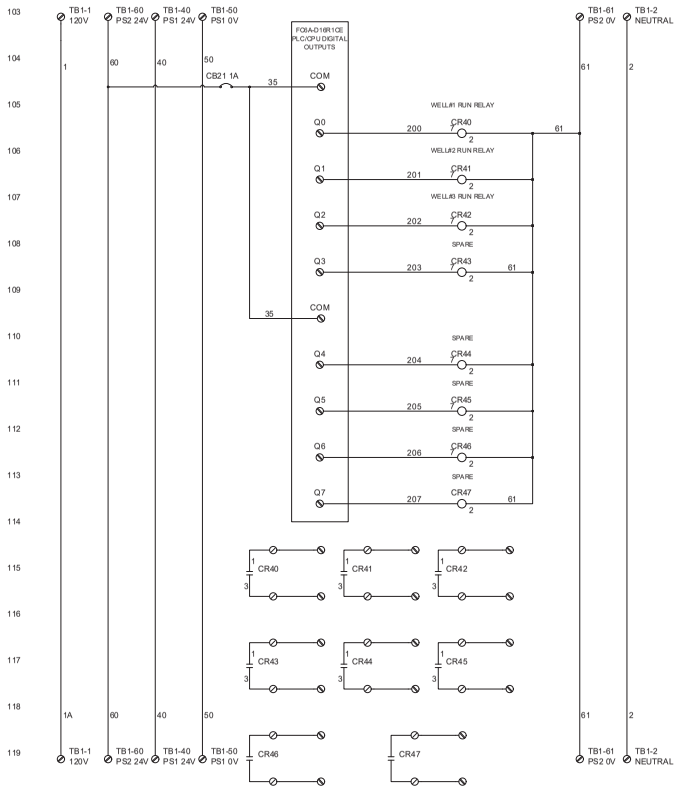

CONTINUED ABOVE RIGHT

CONTINUED FROM BELOW LEFT

NOTE: All Analog Cables to be Twisted & Shielded Cable

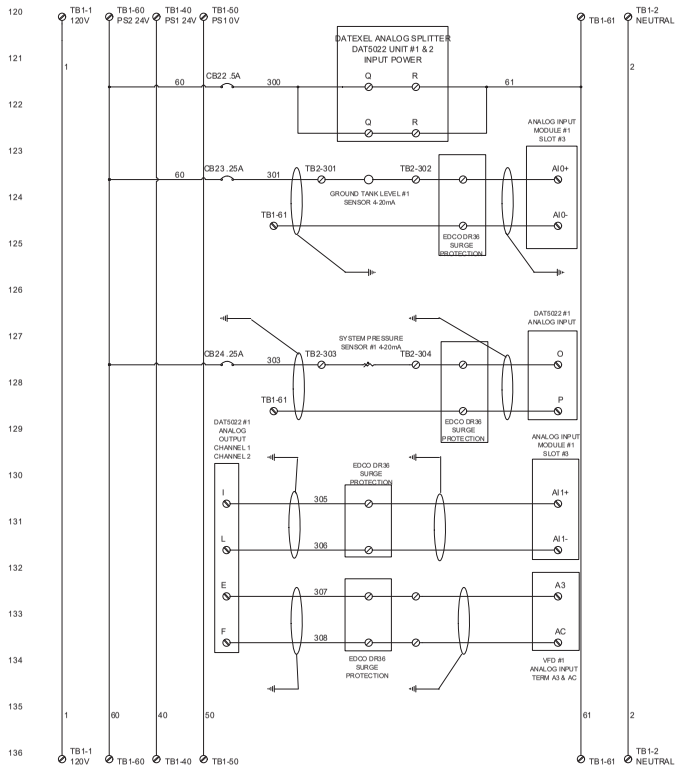

CONTINUED ON SHEET E-7

THOMAS ENGINEERING
777 S Harbour Island Blvd, STE 350, TAMPA, FL 33602
813.227.9150
Certificate of Authorization No. 00031028

No.	REVISIONS	DATE	BY

Kimley»Horn
© #### KIMLEY-HORN AND ASSOCIATES, INC.
109 SOUTH KENTUCKY AVENUE, LAKELAND, FL 33801
PHONE: 863-667-2091 FAX: 863-667-2093
WWW.KIMLEY-HORN.COM REGISTRY NO. 35106

LICENSED PROFESSIONAL
TIMOTHY THOMAS, P.E.
FLORIDA LICENSE NUMBER 47079
DATE 05/19/2023

KHA PROJECT 046440021
DATE 5-19-2023
SCALE AS SHOWN
DESIGNED BY TDT
DRAWN BY JLT
CHECKED BY GLW

GLENWOOD WTP PANEL WIRING SCHEMATICS (SHEET 4 OF 8)

GLENDWOOD AND CRYSTAL LAKE WTP CONTROL PANEL IMPROVEMENTS
PREPARED FOR
AVON PARK
AVON PARK FL

SHEET NUMBER
E-6

This document, together with the concepts and designs presented herein, as an instrument of service, is intended only for the specific purpose and client for which it was prepared. Reuse of and improper reliance on this document without written authorization and adaptation by Kimley-Horn and Associates, Inc. shall be without liability to Kimley-Horn and Associates, Inc.

CONTINUED FROM SHEET E-6

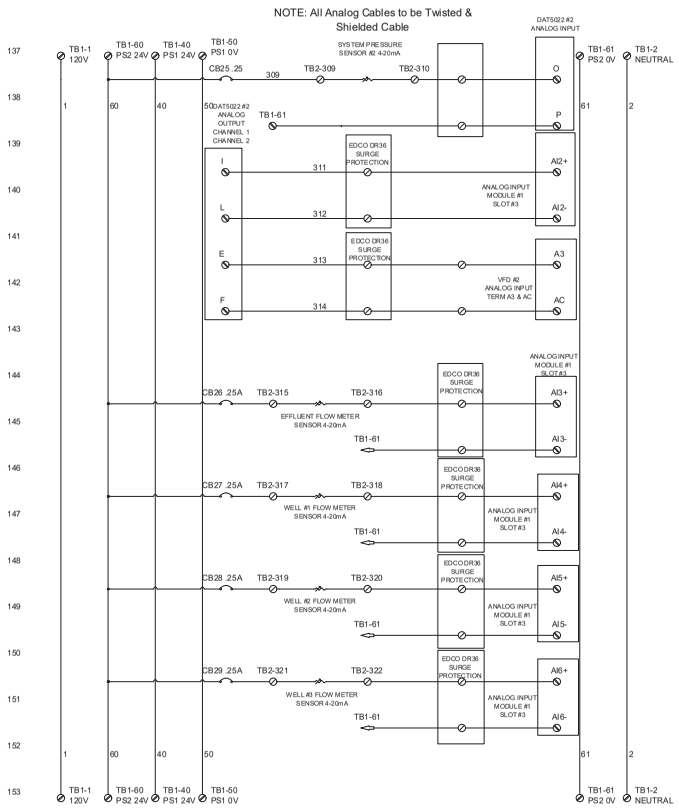

CONTINUED ABOVE RIGHT

CONTINUED FROM BELOW LEFT

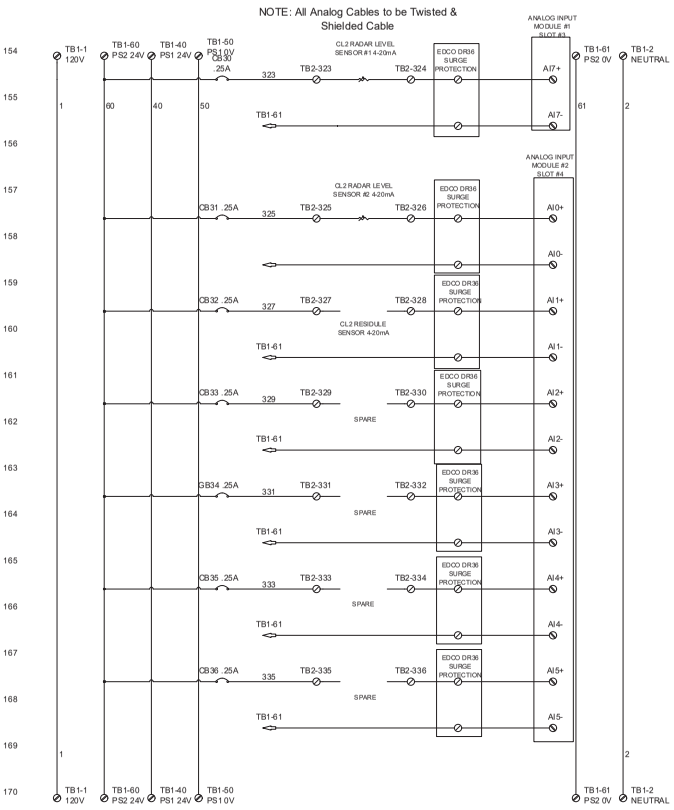

CONTINUED ON SHEET E-8

THOMAS ENGINEERING
777 S Harbour Island Blvd, STE 350, TAMPA, FL 33602
813.227.9160
Certificate of Authorization No. 00031028

No.	REVISIONS	DATE	BY

Kimley»Horn
© 2023 KIMLEY-HORN AND ASSOCIATES, INC.
109 SOUTH KENTUCKY AVENUE, LAKELAND, FL 33801
PHONE: 863-667-2091 FAX: 863-667-2093
WWW.KIMLEY-HORN.COM REGISTRY NO. 35106

LICENSED PROFESSIONAL
TIMOTHY THOMAS, P.E.
FLORIDA LICENSE NUMBER 47079
DATE 05/19/2023

KHA PROJECT 046440021
DATE 5-19-2023
SCALE AS SHOWN
DESIGNED BY TDT
DRAWN BY JLT
CHECKED BY GLW

GLENWOOD WTP PANEL WIRING SCHEMATICS (SHEET 5 OF 8)

GLENDWOOD AND CRYSTAL LAKE WTP CONTROL PANEL IMPROVEMENTS
PREPARED FOR
AVON PARK
AVON PARK FL

SHEET NUMBER
E-7

This document, together with the concepts and designs presented herein, as an instrument of service, is intended only for the specific purpose and client for which it was prepared. Reuse of and improper reliance on this document without written authorization and adaptation by Kimley-Horn and Associates, Inc. shall be without liability to Kimley-Horn and Associates, Inc.

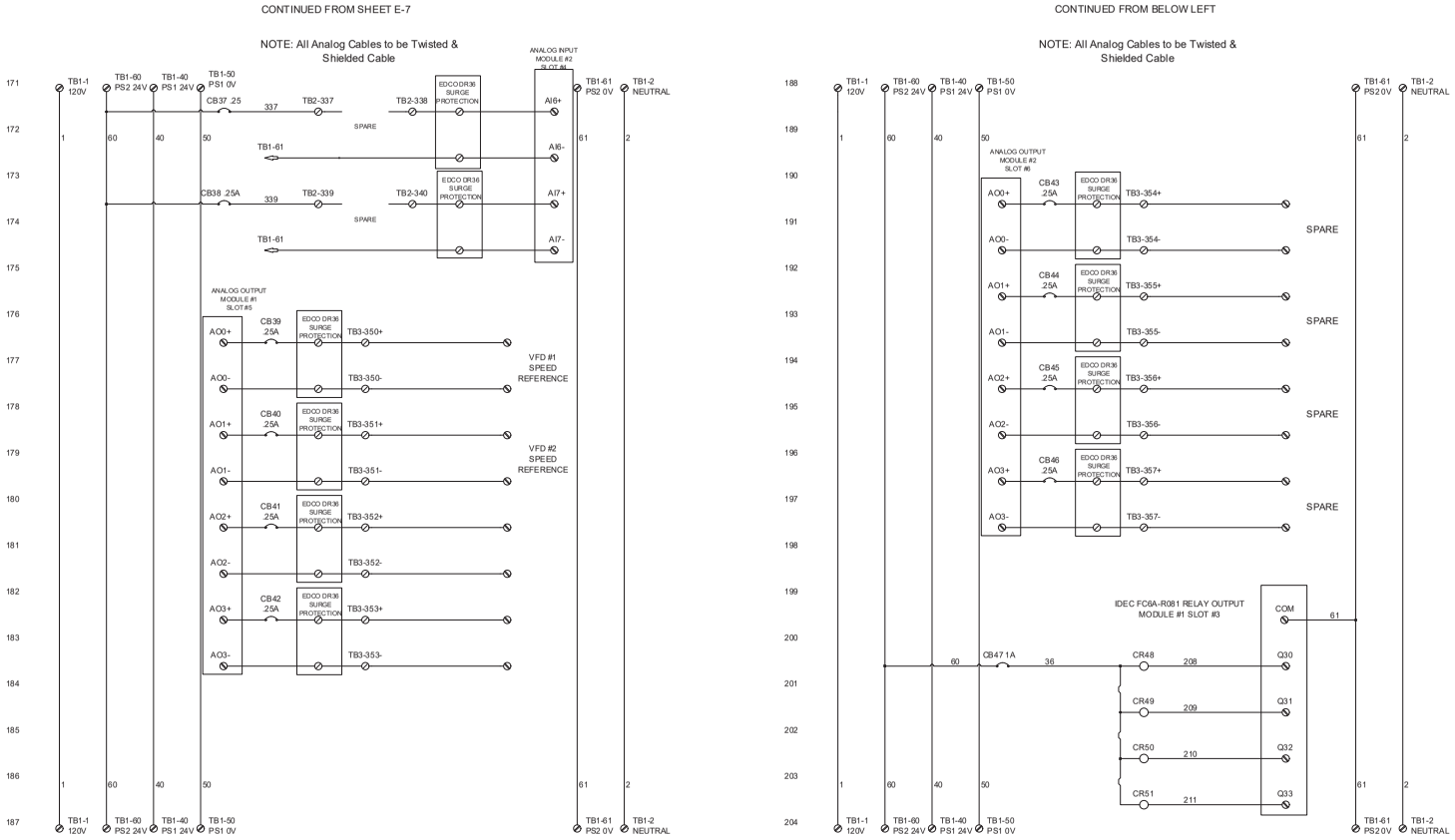

THOMAS ENGINEERING
777 S Harbour Island Blvd, STE 350, TAMPA, FL 33602
813.227.9150
Certificate of Authorization No. 00031028

No.	REVISIONS	DATE	BY

Kimley»Horn
© ####, KIMLEY-HORN AND ASSOCIATES, INC.
109 SOUTH KENTUCKY AVENUE, LAKELAND, FL 33801
PHONE: 863-687-2574 FAX: 863-687-2577
WWW.KIMLEY-HORN.COM REGISTRY NO. 35106

LICENSED PROFESSIONAL
TIMOTHY THOMAS, P.E.
FLORIDA LICENSE NUMBER 47079
DATE: 05/19/2023

KHA PROJECT 046440021
DATE 5-19-2023
SCALE AS SHOWN
DESIGNED BY TDT
DRAWN BY JLT
CHECKED BY GLW

GLENWOOD WTP PANEL WIRING SCHEMATICS (SHEET 6 OF 8)

GLENDWOOD AND CRYSTAL LAKE WTP CONTROL PANEL IMPROVEMENTS
PREPARED FOR
AVON PARK
AVON PARK FL

SHEET NUMBER
E-8

This document, together with the concepts and designs presented herein, as an instrument of service, is intended only for the specific purpose and client for which it was prepared. Reuse of and improper reliance on this document without written authorization and adaptation by Kimley-Horn and Associates, Inc. shall be without liability to Kimley-Horn and Associates, Inc.

CONTINUED FROM SHEET E-8

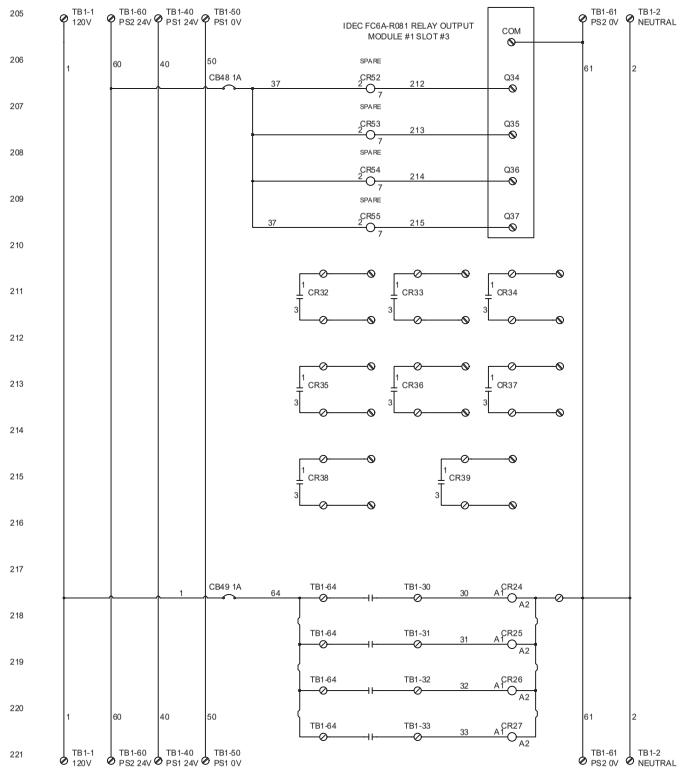

CONTINUED ABOVE RIGHT

CONTINUED FROM BELOW LEFT

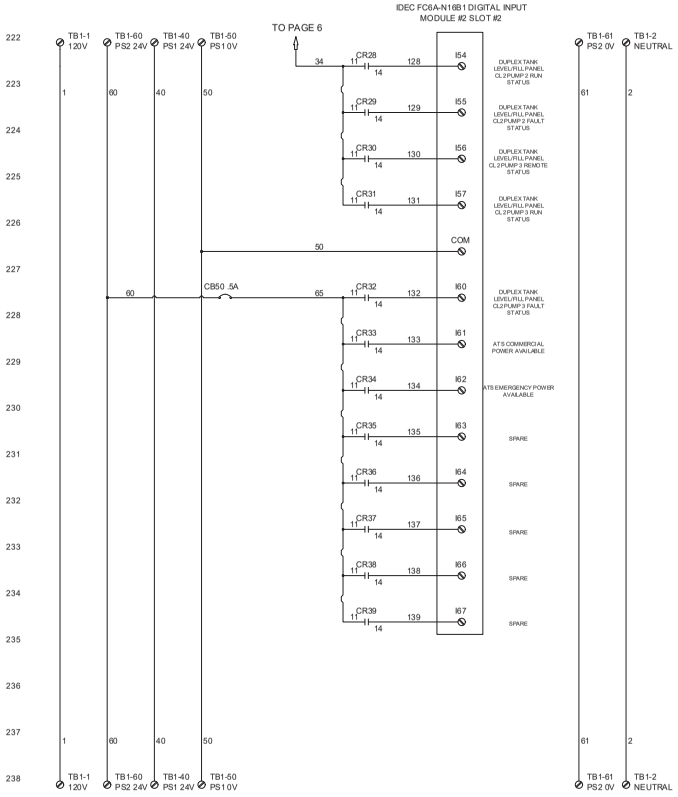

CONTINUED ON SHEET E-10

THOMAS ENGINEERING
777 S Harbour Island Blvd, STE 350, TAMPA, FL 33602
813.227.0950
Certificate of Authorization No. 00031028

No.	REVISIONS	DATE	BY

Kimley»Horn
© #### KIMLEY-HORN AND ASSOCIATES, INC.
109 SOUTH KENTUCKY AVENUE, LAKELAND, FL 33801
PHONE: 863-667-2091 FAX: 863-667-2093
WWW.KIMLEY-HORN.COM REGISTRY NO. 35106

LICENSED PROFESSIONAL
TIMOTHY THOMAS, P.E.
FLORIDA LICENSE NUMBER 47079
DATE: 05/19/2023

KHA PROJECT 046440021
DATE 5-19-2023
SCALE AS SHOWN
DESIGNED BY TDT
DRAWN BY JLT
CHECKED BY GLW

GLENWOOD WTP PANEL WIRING SCHEMATICS (SHEET 7 OF 8)

GLENDWOOD AND CRYSTAL LAKE WTP CONTROL PANEL IMPROVEMENTS
PREPARED FOR
AVON PARK
AVON PARK FL

SHEET NUMBER
E-9

This document, together with the concepts and designs presented herein, as an instrument of service, is intended only for the specific purpose and client for which it was prepared. Reuse of and improper reliance on this document without written authorization and adaptation by Kimley-Horn and Associates, Inc. shall be without liability to Kimley-Horn and Associates, Inc.

CONTINUED FROM SHEET E-9

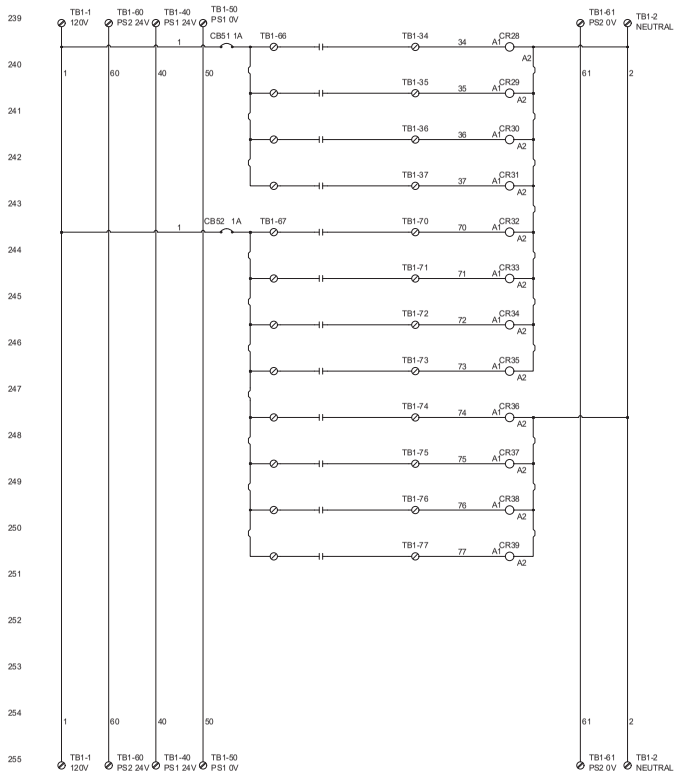

GLENWWOD WTP
CONTROL PANEL
BILL OF MATERIALS

QTY.	PART DESCRIPTION	MANUFACTURER	PART #
2	Single 120V 15A Din rail Receptacle	Automation Systems Interconnect	IMACP01
1	System Battery Backup	Cyberpower	CP1500PFCLCD PFC
2	DIN RAIL	AUTOMATION DIRECT	DN-R35SAL1-2
100	SINGLE DIN TERMINALS	AUTOMATION DIRECT	DN-T10-A
20	TERMINAL END BLOCKS	AUTOMATION DIRECT	DN-EB35MN
10	DOUBLE DIN TERMINALS	AUTOMATION DIRECT	DN-D10-A
10	DIN GROUND TERMINALS	AUTOMATION DIRECT	DN-G10
1	DIN MISC.	AUTOMATION DIRECT	
3	ANALOG SPITTER	DATEXEL	DAT5022
24	SURGE SUPPRESSION	EDCO	EDCO DR36
2	PRESSURE TRANSDUCERS	VEGA	BAR38
2	RADAR LEVEL SENSORS	VEGA	C11
1	SCADA SOFTWARE	TRIHEDRAL	1000 TAG
2	24VDC Power Supply	IDEC	P36R-C24
1	HMI	IDEC	HG4G-VFXT22MF-B
1	PLC	IDEC	FC6A-D16R1CEE
1	DIGITAL INPUT MODULE	IDEC	FC6A-N16B1
1	DIGITAL OUTPUT MODULE	IDEC	FC6A-R08I1
2	ANALOG INPUT MODULE	IDEC	FC6A-J8A1
2	ANALOG OUTPUT MODULE	IDEC	FC6A-K4A1
24	INTERPOSING RELAYS	IDEC	RY8H-I-AD110
16	OUTPUT RELAYS	IDEC	RR2P-UL/CSA-24 w/B
16	SOCKET	IDEC	SR2P-08
1	ETHERNET SWITCH	IDEC	SX5E-HU085B
1	CB1 QOU110 1P DIN RAIL MOUNT	SQUARE D	QOU110
1	CB2 SUPPLEMENTARY BREAKER	DINnector	3A
1	CB3 SUPPLEMENTARY BREAKER	DINnector	3A
1	CB4 SUPPLEMENTARY BREAKER	DINnector	10A
1	CB5 SUPPLEMENTARY BREAKER	DINnector	10A
1	CB6 SUPPLEMENTARY BREAKER	DINnector	5A
1	CB7 SUPPLEMENTARY BREAKER	DINnector	5A
1	CB8 SUPPLEMENTARY BREAKER	DINnector	5A
1	CB9 SUPPLEMENTARY BREAKER	DINnector	5A
1	CB10 SUPPLEMENTARY BREAKER	DINnector	5A
1	CB11 SUPPLEMENTARY BREAKER	DINnector	2A
1	CB12 SUPPLEMENTARY BREAKER	DINnector	1A
1	CB13 SUPPLEMENTARY BREAKER	DINnector	5A
1	CB14 SUPPLEMENTARY BREAKER	DINnector	5A
1	CB15 BREAKER	EATON	FAZ-C1-1-NA-L-SP
1	CB16 SUPPLEMENTARY BREAKER	DINnector	5A
1	CB17 BREAKER	EATON	FAZ-C1-1-NA-L-SP
1	CB18 BREAKER	EATON	FAZ-C1-1-NA-L-SP
1	CB19 SUPPLEMENTARY BREAKER	DINnector	5A
1	CB20 SUPPLEMENTARY BREAKER	DINnector	1A
1	CB21 SUPPLEMENTARY BREAKER	DINnector	5A
1	CB22-30 SUPPLEMENTARY BREAKER	DINnector	25A
2	HIGH SERVICE PUMP VFD's	YASKAWA	PW4A0088FAA
2	VFD INPUT LINE REACTORS	TCI	KDRF2H
2	VFD OUTPUT LINE REACTORS	TCI	KDRF32P
2	REMOTE KEYPAD KITS	YASKAWA	UUX00/537
2	MODBUS TCP/IP COMM CARDS	YASKAWA	SI-EM3
2	ETHERNET CABLES		
60'	#2 WELDING CABLE		
36	#2 WELDING CABLE CRIMP LUGS	LLSCO CSWS-1-3/8-10PK	
1	HEAT SHRINK		

THOMAS ENGINEERING
777 S Harbour Island Blvd, STE 350, TAMPA, FL 33602
813.227.9150
Certificate of Authorization No. 00031028

No.	REVISIONS	DATE	BY

Kimley»Horn
© #### KIMLEY-HORN AND ASSOCIATES, INC.
109 SOUTH KENTUCKY AVENUE, LAKELAND, FL 33801
PHONE: 863-667-2091 FAX: 863-667-2092
WWW.KIMLEY-HORN.COM REGISTRY NO. 35106

LICENSED PROFESSIONAL
TIMOTHY THOMAS, P.E.
FLORIDA LICENSE NUMBER 47079
DATE: 05/19/2023

KHA PROJECT 046440021
DATE 5-19-2023
SCALE AS SHOWN
DESIGNED BY TDT
DRAWN BY JLT
CHECKED BY GLW

GLENWOOD WTP PANEL WIRING SCHEMATICS (SHEET 8 OF 8)

GLENDWOOD AND CRYSTAL LAKE WTP CONTROL PANEL IMPROVEMENTS
PREPARED FOR
AVON PARK
AVON PARK FL

SHEET NUMBER
E-10

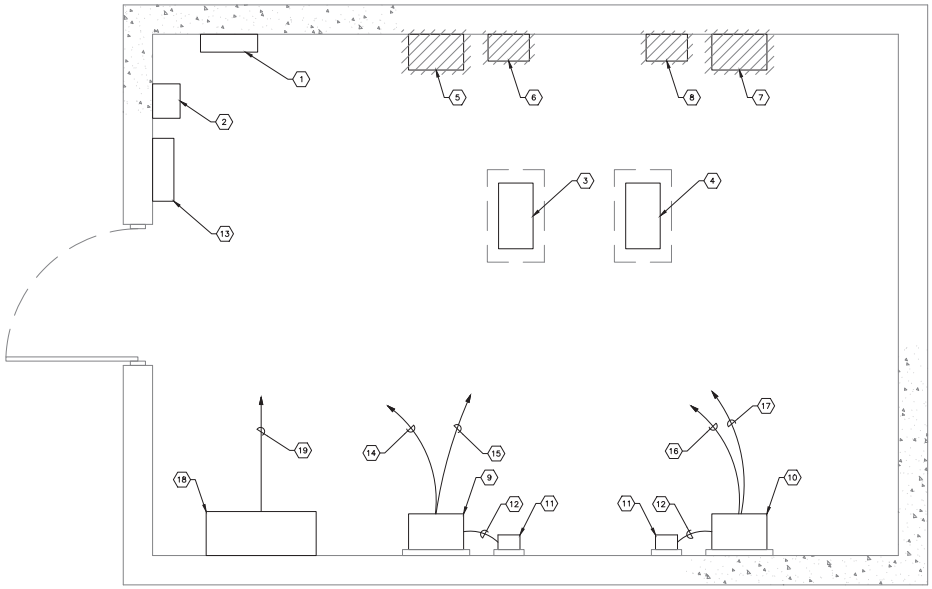

CRYSTAL LAKE WTP ELECTRICAL ROOM PLAN

SCALE: NOT TO SCALE

KEYED NOTES:

1. EXISTING 120V LOADCENTER. PROVIDE AND INSTALL NEW SINGLE-POLE, 120V, 20A CIRCUIT BREAKER TO FEED NEW CRYSTAL LAKE CONTROL PANEL.
2. EXISTING SINGLE-PHASE, 15KVA, 480-120V TRANSFORMER. NO WORK REQUIRED.
3. EXISTING 460V, 25 HP HIGH SERVICE PUMP #1.
4. EXISTING 460V, 25 HP HIGH SERVICE PUMP #2.
5. EXISTING HIGH SERVICE PUMP #1 VARIABLE FREQUENCY DRIVE (VFD) TO BE REMOVED.
6. EXISTING HIGH SERVICE PUMP #1 VFD SURGE PROTECTION DEVICE TO BE REMOVED.
7. EXISTING HIGH SERVICE PUMP #2 VARIABLE FREQUENCY DRIVE (VFD) TO BE REMOVED.
8. EXISTING HIGH SERVICE PUMP #8 VFD SURGE PROTECTION DEVICE TO BE REMOVED.
9. PROVIDE AND INSTALL NEW 25 HP VFD FOR HIGH SERVICE PUMP #1. CONTRACTOR MAY LOCATE VFD FOR CONVENIENCE BASED ON FIELD CONDITIONS. MOUNT VFD ON WALL WITH 1-5/8" X 1-5/8" STAINLESS STEEL UNISTRUT. REFER ALSO TO VFD SPECIFICATION 16370.
10. PROVIDE AND INSTALL NEW 25 HP VFD FOR HIGH SERVICE PUMP #2. CONTRACTOR MAY LOCATE VFD FOR CONVENIENCE BASED ON FIELD CONDITIONS. MOUNT VFD ON WALL WITH 1-5/8" X 1-5/8" STAINLESS STEEL UNISTRUT. REFER ALSO TO VFD SPECIFICATION 16370.
11. PROVIDE AND INSTALL NEW SURGE PROTECTION DEVICE (SPD) FOR NEW VFD. SPD TO BE SQUARE-D SSP05XDSE20A OR EQUAL. MOUNT SPD ON WALL WITH 1-5/8" X 1-5/8" STAINLESS STEEL UNISTRUT.
12. PROVIDE AND INSTALL 3-#10 THWN CU + 1-#10 THWN CU GND FROM SPD TO VFD IN 1" LIQUIDTIGHT, FLEXIBLE, NON-METALLIC CONDUIT.
13. EXISTING 277/480V, 125A PANELBOARD. CONTRACTOR SHALL REUSE EXISTING 3-POLE, 40A VFD BRANCH CIRCUIT BREAKERS IF CONFIRMED BY THE VFD SUPPLIER. IF THE VFD SUPPLIER DETERMINES THAT A HIGHER AMPERAGE CIRCUIT BREAKER IS REQUIRED, REPLACE THE CIRCUIT BREAKERS BASED ON THE VFD SUPPLIER'S RECOMMENDATIONS.
14. PROVIDE AND INSTALL 3-#8 THWN CU + 1-#10 THWN CU GND IN 1"C. FROM HIGH SERVICE PUMP #1 VFD TO 277/480V PANELBOARD IN KEYED NOTE #13.
15. PROVIDE AND INSTALL 3-#8 THWN CU + 1-#10 THWN CU GND IN 1"C. FROM HIGH SERVICE PUMP #1 VFD TO EXISTING HIGH SERVICE PUMP #1. CONNECTION TO HIGH SERVICE PUMP MOTOR SHALL BE VIA LIQUIDTIGHT, FLEXIBLE, NON-METALLIC CONDUIT.
16. PROVIDE AND INSTALL 3-#8 THWN CU + 1-#10 THWN CU GND IN 1"C. FROM HIGH SERVICE PUMP #2 VFD TO 277/480V PANEL BOARD IN KEYED NOTE #13.
17. PROVIDE AND INSTALL 3-#8 THWN CU + 1-#10 THWN CU GND IN 1"C. FROM HIGH SERVICE PUMP #2 VFD TO EXISTING HIGH SERVICE PUMP #2. CONNECTION TO HIGH SERVICE PUMP MOTOR SHALL BE VIA LIQUIDTIGHT, FLEXIBLE, NON-METALLIC CONDUIT.
18. PROVIDE AND INSTALL NEW CRYSTAL LAKE CONTROL PANEL. PROVIDE AND INSTALL CONDUIT AND CONDUCTORS AS REQUIRED PER SHEETS E-12 THROUGH E-17.
19. PROVIDE AND INSTALL 2-#12 THWN CU + 1-312 THWN CU GND TO LOADCENTER INDICATED IN KEYED NOTE #1.

THOMAS ENGINEERING
777 S Harbour Island Blvd, STE 350, TAMPA, FL 33602
813.227.9160
Certificate of Authorization No. 00031028

No.	REVISIONS	DATE	BY

Kimley»Horn
© #### KIMLEY-HORN AND ASSOCIATES, INC.
109 SOUTH KENTUCKY AVENUE, LAKELAND, FL 33801
PHONE: 863-667-2091 FAX: 863-667-2092
WWW.KIMLEY-HORN.COM REGISTRY NO. 35106

LICENSED PROFESSIONAL
TIMOTHY THOMAS, P.E.
FLORIDA LICENSE NUMBER 47079
DATE 05/19/2023

KHA PROJECT 046444021
DATE 5-19-2023
SCALE AS SHOWN
DESIGNED BY TDT
DRAWN BY JLT
CHECKED BY GLW

CRYSTAL LAKE WTP ELECTRICAL ROOM PLAN

GLENDWOOD AND CRYSTAL LAKE WTP CONTROL PANEL IMPROVEMENTS
PREPARED FOR
AVON PARK
AVON PARK FL

SHEET NUMBER
E-11

This document, together with the concepts and designs presented herein, as an instrument of service, is intended only for the specific purpose and client for which it was prepared. Reuse of and improper reliance on this document without written authorization and adaptation by Kimley-Horn and Associates, Inc. shall be without liability to Kimley-Horn and Associates, Inc.

This document, together with the concepts and designs presented herein, as an instrument of service, is intended only for the specific purpose and client for which it was prepared. Reuse of and improper reliance on this document without written authorization and adaptation by Kimley-Horn and Associates, Inc. shall be without liability to Kimley-Horn and Associates, Inc.

LAKEVIEW WATER TREATMENT CONTROL SYSTEM DRAWINGS
SYSTEM LINE VOLTAGE / 120VAC

CAUTION MULTIPLE LINE POWER SOURCES PRESENT!

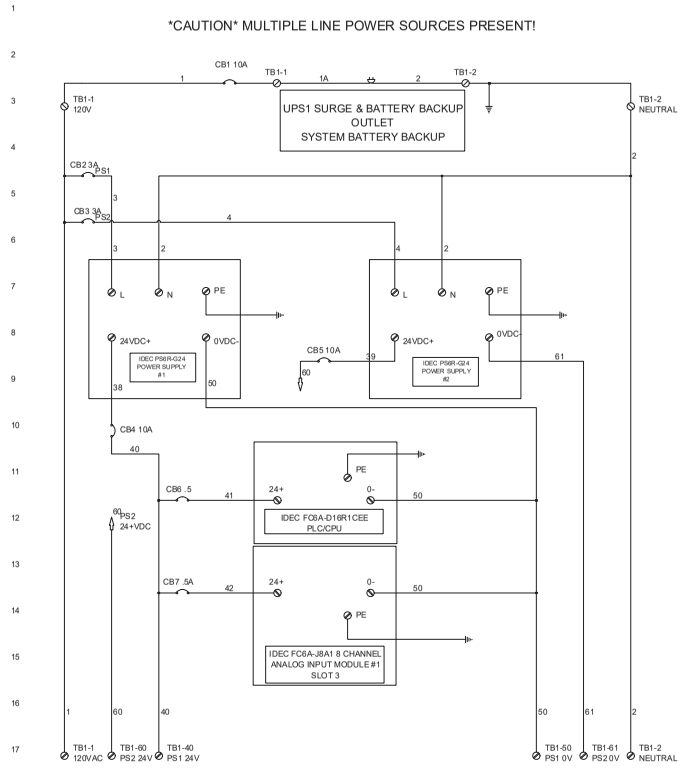

CONTINUED ABOVE RIGHT

CONTINUED FROM BELOW LEFT

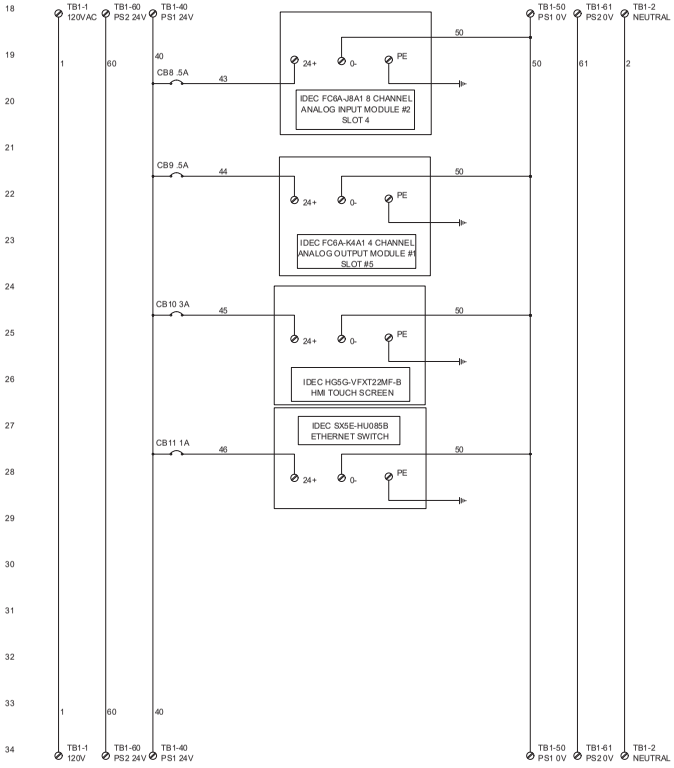

CONTINUED ON SHEET E-13

THOMAS ENGINEERING
777 S Harbour Island Blvd, STE 350, TAMPA, FL 33602
813.227.9160
Certificate of Authorization No. 00031028

No.	REVISIONS	DATE	BY

Kimley»Horn
© 2022 KIMLEY-HORN AND ASSOCIATES, INC.
109 SOUTH KENTUCKY AVENUE, LAKELAND, FL 33801
PHONE: 863-667-2091 FAX: 863-667-2092
WWW.KIMLEY-HORN.COM REGISTRY NO. 35106

LICENSED PROFESSIONAL
TIMOTHY THOMAS, P.E.
FLORIDA LICENSE NUMBER 47079
DATE 05/19/2023

KHA PROJECT 046440021
DATE 5-19-2023
SCALE AS SHOWN
DESIGNED BY TDT
DRAWN BY JLT
CHECKED BY GLW

CRYSTAL LAKE PANEL WIRING SCHEMATICS (SHEET 1 OF 6)

GLENDWOOD AND CRYSTAL LAKE WTP CONTROL PANEL IMPROVEMENTS
PREPARED FOR
AVON PARK
AVON PARK FL

SHEET NUMBER
E-12

This document, together with the concepts and designs presented herein, as an instrument of service, is intended only for the specific purpose and client for which it was prepared. Reuse of and improper reliance on this document without written authorization and adaptation by Kimley-Horn and Associates, Inc. shall be without liability to Kimley-Horn and Associates, Inc.

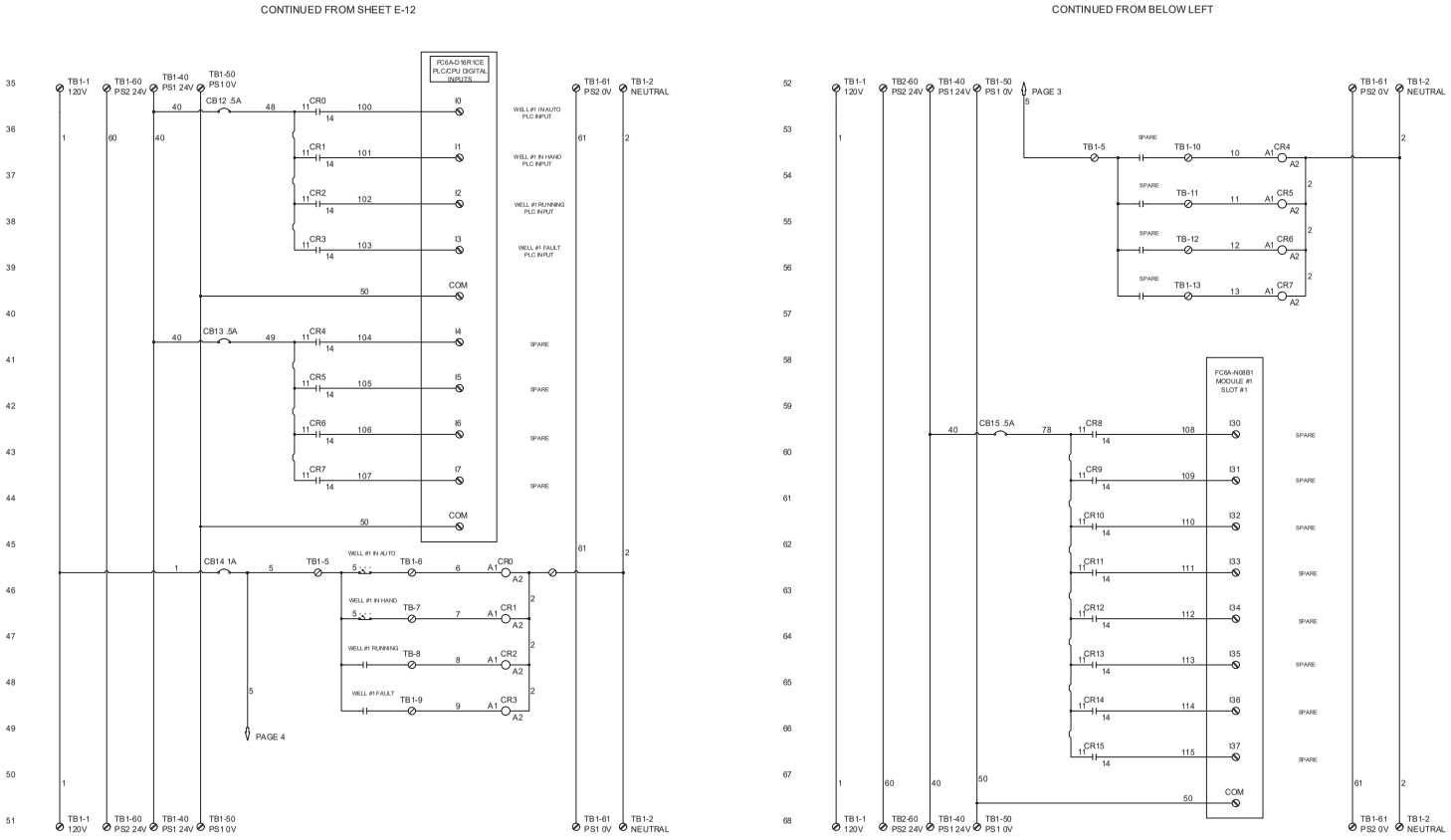

THOMAS ENGINEERING
777 S Harbour Island Blvd, STE 350, TAMPA, FL 33602
813.227.9160
Certificate of Authorization No. 00031028

No.	REVISIONS	DATE	BY

Kimley»Horn
© 2023 KIMLEY-HORN AND ASSOCIATES, INC.
109 SOUTH KENTUCKY AVENUE, LAKELAND, FL 33801
PHONE: 863-667-2091 FAX: 863-667-2093
WWW.KIMLEY-HORN.COM REGISTRY NO. 35106

LICENSED PROFESSIONAL
TIMOTHY THOMAS, P.E.
FLORIDA LICENSE NUMBER 47079
DATE: 05/19/2023

KHA PROJECT 046440021
DATE 5-19-2023
SCALE AS SHOWN
DESIGNED BY TDT
DRAWN BY JLT
CHECKED BY GLW

CRYSTAL LAKE PANEL WIRING SCHEMATICS (SHEET 2 OF 6)

GLENDWOOD AND CRYSTAL LAKE WTP CONTROL PANEL IMPROVEMENTS
PREPARED FOR
AVON PARK
AVON PARK FL

SHEET NUMBER
E-13

This document, together with the concepts and designs presented herein, as an instrument of service, is intended only for the specific purpose and client for which it was prepared. Reuse of and improper reliance on this document without written authorization and adaptation by Kimley-Horn and Associates, Inc. shall be without liability to Kimley-Horn and Associates, Inc.

CONTINUED FROM SHEET E-13

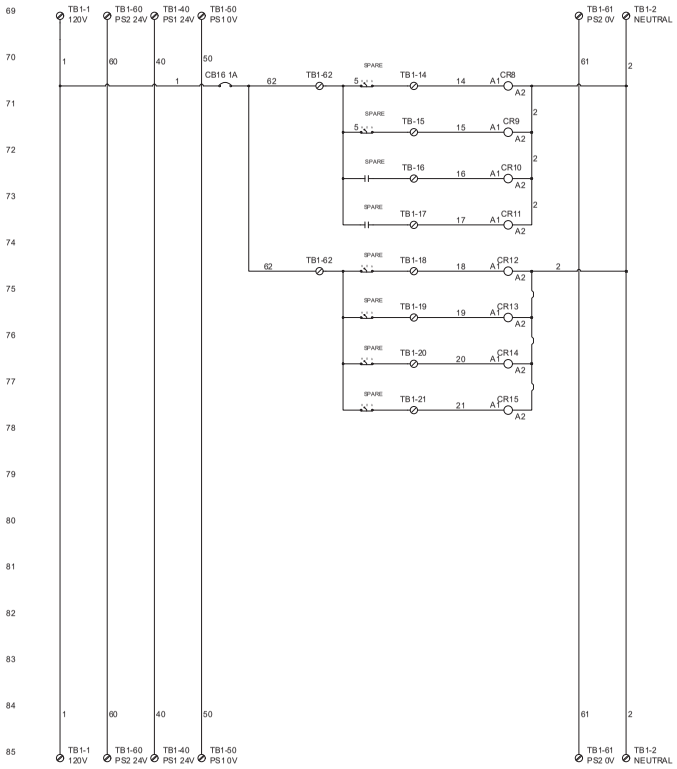

CONTINUED ABOVE RIGHT

CONTINUED FROM BELOW LEFT

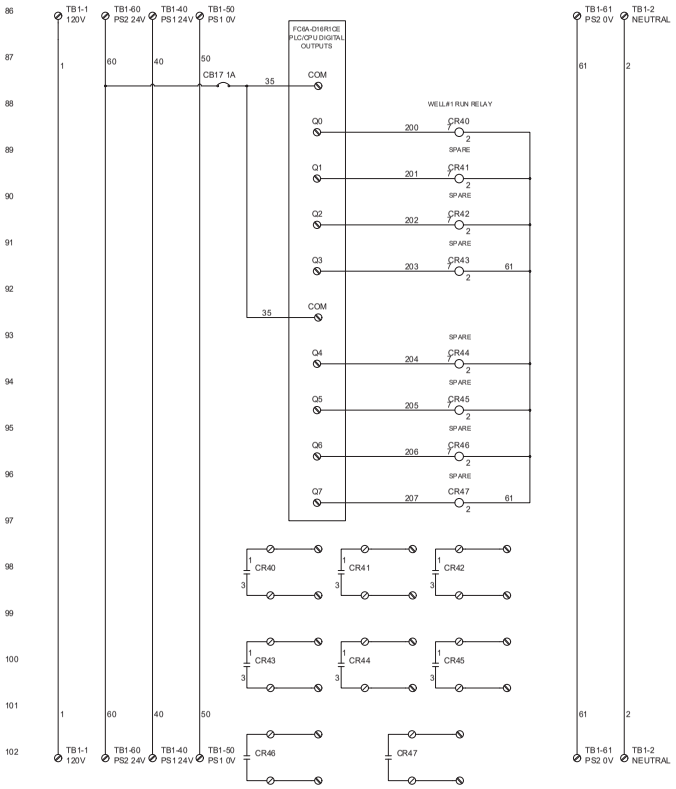

CONTINUED ON SHEET E-15

THOMAS ENGINEERING
777 S Harbour Island Blvd, STE 350, TAMPA, FL 33602
813.227.9160
Certificate of Authorization No. 00031028

No.	REVISIONS	DATE	BY

Kimley»Horn
© ####, KIMLEY-HORN AND ASSOCIATES, INC.
109 SOUTH KENTUCKY AVENUE, LAKELAND, FL 33801
PHONE: 863-686-1131
WWW.KIMLEY-HORN.COM REGISTRY NO. 35106

LICENSED PROFESSIONAL
TIMOTHY THOMAS, P.E.
FLORIDA LICENSE NUMBER 47079
DATE: 05/19/2023

KHA PROJECT 046440021
DATE 5-19-2023
SCALE AS SHOWN
DESIGNED BY TDT
DRAWN BY JLT
CHECKED BY GLW

CRYSTAL LAKE PANEL WIRING SCHEMATICS (SHEET 3 OF 6)

GLENDWOOD AND CRYSTAL LAKE WTP CONTROL PANEL IMPROVEMENTS
PREPARED FOR
AVON PARK
AVON PARK FL

SHEET NUMBER
E-14

CONTINUED FROM SHEET E-14

NOTE: All Analog Cables to be Twisted & Shielded Cable

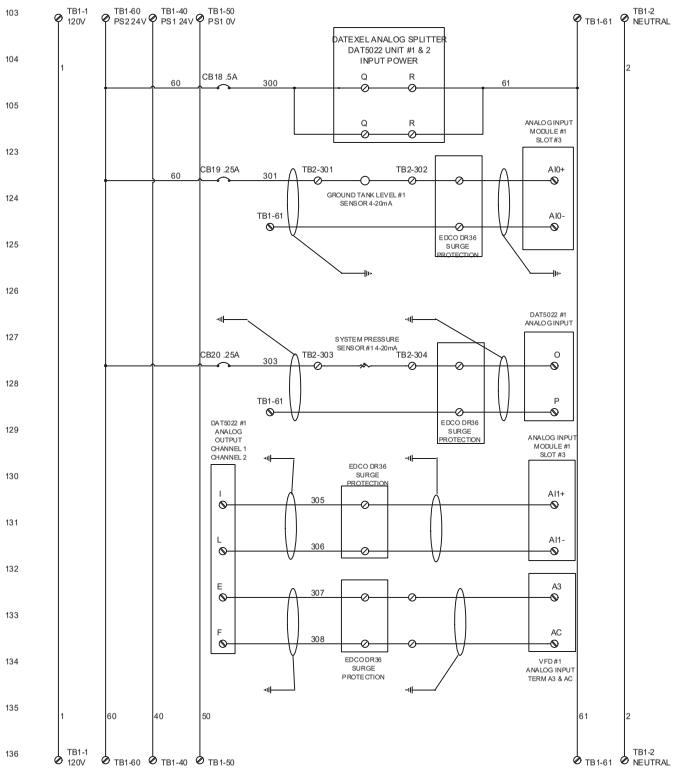

CONTINUED ABOVE RIGHT

CONTINUED FROM BELOW LEFT

NOTE: All Analog Cables to be Twisted & Shielded Cable

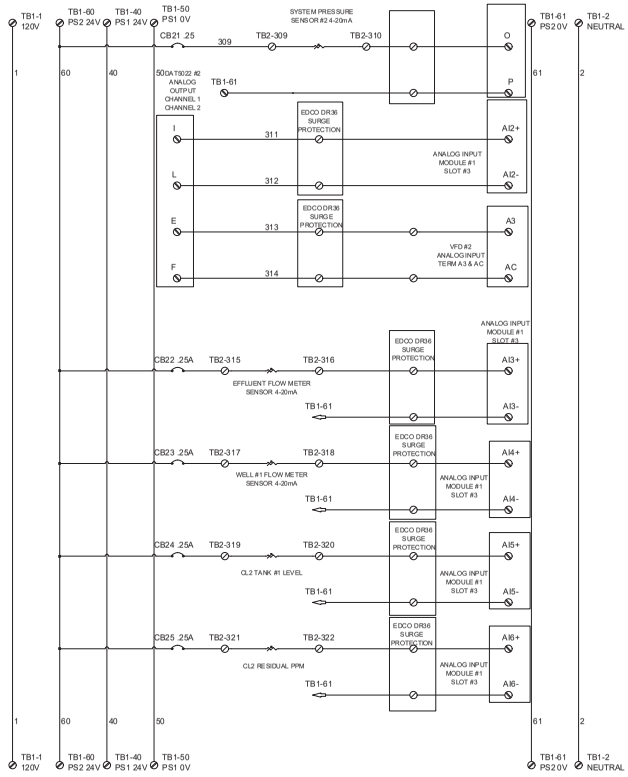

CONTINUED ON SHEET E-16

THOMAS ENGINEERING
777 S Harbour Island Blvd, STE 350, TAMPA, FL 33602
813.227.9160
Certificate of Authorization No. 00031028

No.	REVISIONS	DATE	BY

Kimley»Horn
© ####, KIMLEY-HORN AND ASSOCIATES, INC.
109 SOUTH KENTUCKY AVENUE, LAKELAND, FL 33801
PHONE: 863-667-2091 FAX: 863-667-2093
WWW.KIMLEY-HORN.COM REGISTRY NO. 35106

LICENSED PROFESSIONAL
TIMOTHY THOMAS, P.E.
FLORIDA LICENSE NUMBER 47079
DATE 05/19/2023

KHA PROJECT 046440021
DATE 5-19-2023
SCALE AS SHOWN
DESIGNED BY TDT
DRAWN BY JLT
CHECKED BY GLW

CRYSTAL LAKE PANEL WIRING SCHEMATICS (SHEET 4 OF 6)

GLENDWOOD AND CRYSTAL LAKE WTP CONTROL PANEL IMPROVEMENTS
PREPARED FOR
AVON PARK
AVON PARK FL

SHEET NUMBER
E-15

This document, together with the concepts and designs presented herein, as an instrument of service, is intended only for the specific purpose and client for which it was prepared. Reuse of and improper reliance on this document without written authorization and adaptation by Kimley-Horn and Associates, Inc. shall be without liability to Kimley-Horn and Associates, Inc.

This document, together with the concepts and designs presented herein, as an instrument of service, is intended only for the specific purpose and client for which it was prepared. Reuse of and improper reliance on this document without written authorization and adaptation by Kimley-Horn and Associates, Inc. shall be without liability to Kimley-Horn and Associates, Inc.

CONTINUED FROM SHEET E-15

NOTE: All Analog Cables to be Twisted & Shielded Cable

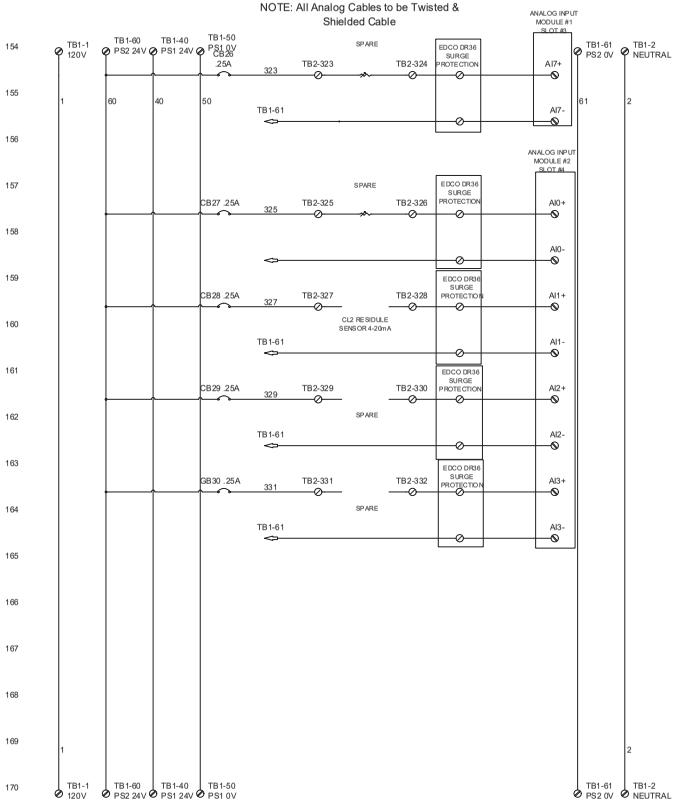

CONTINUED ABOVE RIGHT

CONTINUED FROM BELOW LEFT

NOTE: All Analog Cables to be Twisted & Shielded Cable

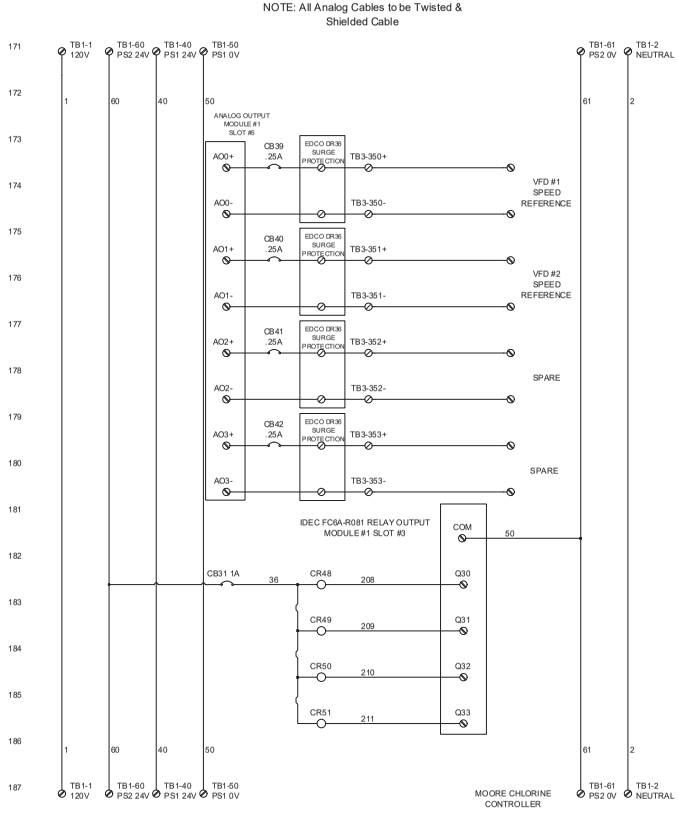

CONTINUED ON SHEET E-17

THOMAS ENGINEERING
777 S Harbour Island Blvd, STE 350, TAMPA, FL 33602
813.227.0950
Certificate of Authorization No. 00031028

No.	REVISIONS	DATE	BY

Kimley»Horn
© 2022 KIMLEY-HORN AND ASSOCIATES, INC.
109 SOUTH KENTUCKY AVENUE, LAKELAND, FL 33801
PHONE: 863-667-2091 FAX: 863-667-2092
WWW.KIMLEY-HORN.COM REGISTRY NO. 35106

LICENSED PROFESSIONAL
TIMOTHY THOMAS, P.E.
FLORIDA LICENSE NUMBER 47079
DATE: 05/19/2023

KHA PROJECT 046440021
DATE 5-19-2023
SCALE AS SHOWN
DESIGNED BY TDT
DRAWN BY JLT
CHECKED BY GLW

CRYSTAL LAKE PANEL WIRING SCHEMATICS (SHEET 5 OF 6)

GLENDWOOD AND CRYSTAL LAKE WTP CONTROL PANEL IMPROVEMENTS
PREPARED FOR
AVON PARK
AVON PARK FL

SHEET NUMBER
E-16

This document, together with the concepts and designs presented herein, as an instrument of service, is intended only for the specific purpose and client for which it was prepared. Reuse of and improper reliance on this document without written authorization and adaptation by Kimley-Horn and Associates, Inc. shall be without liability to Kimley-Horn and Associates, Inc.

CONTINUED FROM SHEET E-16

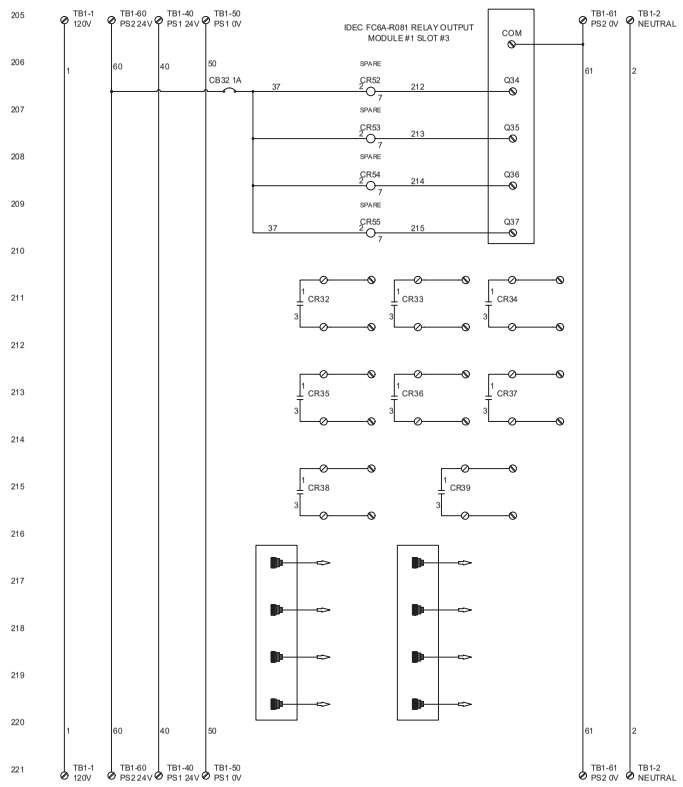

CRYSTAL LAKE WTP CONTROL PANEL BILL OF MATERIALS

QTY.	PART DESCRIPTION	MANUFACTURER	PART #	SUPPLIER	NOTES
1	Single 120V 15A Din rail Receptacle	Automation Systems Interconnect	IMACP01	Amazon	
1	System Battery Backup	Cyberpower	CP1500PFCLCD PFC	Amazon	1500VA
1	PC	Onlogic			PC
2	DIN RAIL	AUTOMATION DIRECT	DN-R35SAL1-2	AUTOMATION DIRECT	Alum.
100	SINGLE DIN TERMINALS	AUTOMATION DIRECT	DN-T10-A	AUTOMATION DIRECT	30A Rated
20	TERMINAL END BLOCKS	AUTOMATION DIRECT	DN-EB35MN	AUTOMATION DIRECT	
10	DOUBLE DIN TERMINALS	AUTOMATION DIRECT	DN-D10-A	AUTOMATION DIRECT	
10	DIN GROUND TERMINALS	AUTOMATION DIRECT	DN-G10	AUTOMATION DIRECT	
1	DIN MISC.	AUTOMATION DIRECT		AUTOMATION DIRECT	
3	ANALOG SPITTER	DATEXEL	DAT5022	DATEXEL	
	SURGE SUPPRESSION	EDCO	EDCO DR36	Power Quality Prod.	
2	PRESSURE TRANSDUCERS	VEGA	BAR38	VEGA	0-150 PSI SCALE
1	RADAR LEVEL SENSORS	VEGA	C11	VEGA	GST Radar Level Sensors
1	SCADA SOFTWARE	TRIHEDRAL	1000 TAG	TRIHEDRAL	
2	24VDC Power Supply	IDEC	PS6R-G24	Louis' Pryor Supply	PS1 & PS2
1	HMI	IDEC	HG4G-VFXT22MF-B	Louis' Pryor Supply	HMI
1	PLC	IDEC	FC6A-D16R1CEE	Louis' Pryor Supply	PLC
2	DIGITAL INPUT MODULE	IDEC	FC6A-N16B1	Louis' Pryor Supply	SLOT 1 & 2
1	DIGITAL OUTPUT MODULE	IDEC	FC6A-R081	Louis' Pryor Supply	SLOT 3
2	ANALOG INPUT MODULE	IDEC	FC6A-J8A1	Louis' Pryor Supply	SLOT 4 & 5
1	ANALOG OUTPUT MODULE	IDEC	FC6A-K4A1	Louis' Pryor Supply	SLOT 6 & 7
24	INTERPOSING RELAYS	IDEC	RY8H-L-AD110	Louis' Pryor Supply	RELAYS
16	OUTPUT RELAYS	IDEC	RR2P-ULCDC24 w/B	Louis' Pryor Supply	RELAYS
16	SOCKET	IDEC	SR2P-06	Louis' Pryor Supply	SOCKET
1	ETHERNET SWITCH	IDEC	SX5E-HU08SB	Louis' Pryor Supply	ETH1
1	SCE-30EL3012S S6LPPL	SAGINAW		STATE MOTOR & CONTROL	
1	SCE-30P30	SAGINAW		STATE MOTOR & CONTROL	
1	CB1 QOU110 1P DIN RAIL MOUNT	SQUARE D	QOU110	SUPER BREAKERS	CB1 / UL489
2	SUPPLEMENTARY BREAKER	DINnector	10A	AUTOMATION DIRECT	UL1077
3	SUPPLEMENTARY BREAKER	DINnector	3A	AUTOMATION DIRECT	UL1077
4	SUPPLEMENTARY BREAKER	DINnector	1A	AUTOMATION DIRECT	UL1077
9	SUPPLEMENTARY BREAKER	DINnector	.5A	AUTOMATION DIRECT	UL1077
16	SUPPLEMENTARY BREAKER	DINnector	.25A	AUTOMATION DIRECT	UL1077
1	CB14 BREAKER	EATON	FAZ-C1-1-NA-L-SP	AUTOMATION DIRECT	CB14 / UL489
1	CB16 BREAKER	EATON	FAZ-C1-1-NA-L-SP	AUTOMATION DIRECT	CB16 / UL489
2	HIGH SERVICE PUMP VFD's	YASKAWA	PW4A0038FAA	ICON	
2	VFD INPUT LINE REACTORS	TCI	KDRC1H	ICON	
2	VFD OUTPUT LINE REACTORS	TCI	KDRD3P	ICON	
2	REMOTE KEYPAD KITS	YASKAWA	UIJX0005027	ICON	
2	MODBUS TCP/IP COMM CARDS	YASKAWA	SI-EM3	ICON	
2	ETHERNET CABLES				
60'	#6 WELDING CABLE			WIRE TO GO	
36	#6 WELDING CABLE CRIMP LUGS	LLSCO CSWS-6-14-50pk		FACTORYMATION	
1	STAINLESS STEEL VFD ENCLOSURE	SAGINAW	SCE-48EL3612S S6LPPL	STATE MOTOR & CONTROL	
1	ENCLOSURE BACK PLATE	SAGINAW	SCE-48P36	STATE MOTOR & CONTROL	
2	COOLING FAN KITS	SAGINAW	SCE-N12FA44LG	STATE MOTOR & CONTROL	
2	INTAKE FILTERS	SAGINAW	SCE-N12FGA44LG	STATE MOTOR & CONTROL	
2	STAINLESS STEEL KINDORF			Louis' Pryor Supply	
12	STAINLESS STEEL SPRING NUTS			Louis' Pryor Supply	
1	MISC/ HARDWARE,FANS ETC.				
1	HEAT SHRINK				

THOMAS ENGINEERING
777 S Harbour Island Blvd, STE 350, TAMPA, FL 33602
813.227.0950
Certificate of Authorization No. 00031028

No.	REVISIONS	DATE	BY

Kimley»Horn
© 2022 KIMLEY-HORN AND ASSOCIATES, INC.
109 SOUTH KENTUCKY AVENUE, LAKELAND, FL 33801
PHONE: 863-667-2091 FAX: 863-667-2092
WWW.KIMLEY-HORN.COM REGISTRY NO. 35106

LICENSED PROFESSIONAL
TIMOTHY THOMAS, P.E.
FLORIDA LICENSE NUMBER 47079
DATE: 05/19/2023

KHA PROJECT 046440021
DATE 5-19-2023
SCALE AS SHOWN
DESIGNED BY TDT
DRAWN BY JLT
CHECKED BY GLW

CRYSTAL LAKE PANEL WIRING SCHEMATICS (SHEET 6 OF 6)

GLENDWOOD AND CRYSTAL LAKE WTP CONTROL PANEL IMPROVEMENTS
PREPARED FOR
AVON PARK
AVON PARK FL

SHEET NUMBER
E-17