RCMA HOPEWELL CAMPUS

100 EARNEST E. SIMS ST, FL 33825

INDEX

PAY ITEM DESCRIPTION	TESTING PROTOCOL	TESTING METHOD
8" BASE	COMPACTION (98% OF MODIFIED PROCTOR MAX DENSITY AS PER FM 1-T-180)	THIRD PARTY LABORATORY TO COLLECT AND TEST TWO SAMPLES FROM THE PARKING AREA AND ONE SAMPLE FROM EACH DRIVEWAY (MIN.) USING TEST METHOD D OF FM 1-T-180
	LBR 100	TWO SAMPLES (MIN.) TO BE TAKEN FROM PARKING AREA AND ONE SAMPLE FROM EACH DRIVEWAY AND TESTED BY 3RD PARTY IN ACCORDANCE WITH FM 5-515
10" TYPE B STABILIZATION	COMPACTION (98% OF MODIFIED PROCTOR DENSITY AS PER FM 1-T 180)	THIRD PARTY LABORATORY TO COLLECT AND TEST TWO SAMPLES FROM THE PARKING AREA AND ONE SAMPLE FROM EACH DRIVEWAY (MIN.) USING TEST METHOD D OF FM 1-T-180
	LBR 40	TWO SAMPLES (MIN.) TO BE TAKEN FROM PARKING AREA AND ONE SAMPLE FROM EACH DRIVEWAY AND TESTED BY 3RD PARTY IN ACCORDANCE WITH FM 5-515
CONCRETE SIDEWALKS AND DRIVEWAYS	CONCRETE MIXTURE	CONTRACTOR TO PROVIDE ALL BATCH TICKETS FOR ENGINEER APPROVAL
	BASE SOIL COMPACTION (95% OF AASHTO T99 DENSITY)	TEST EVERY 100 FEET. 3RD PARTY TO COLLECT AND TEST SAMPLES PER AASHTO T99
2" ASPHALT	2" THICKNESS	TWO (MIN.) CORE SAMPLES TAKE FROM THE PARKING AREA AND ONE SAMPLE FROM EACH DRIVEWAY DEMONSTRATING MIN. LAYER THICKNESS IN THE PARKING AREA AND ONE FROM EACH DRIVEWAY, FIELD VERIFY

FIRE FLOWS

FIRE FLOW CALCULATIONS	GAL. PER MIN.	# OF HYDRANTS
REQUIRED PER CODE	1000 GPM @ 20 PSI	1
HYDRANT SUPPLY	1007 GPM @ 20 PSI	2

LOCATION MAP

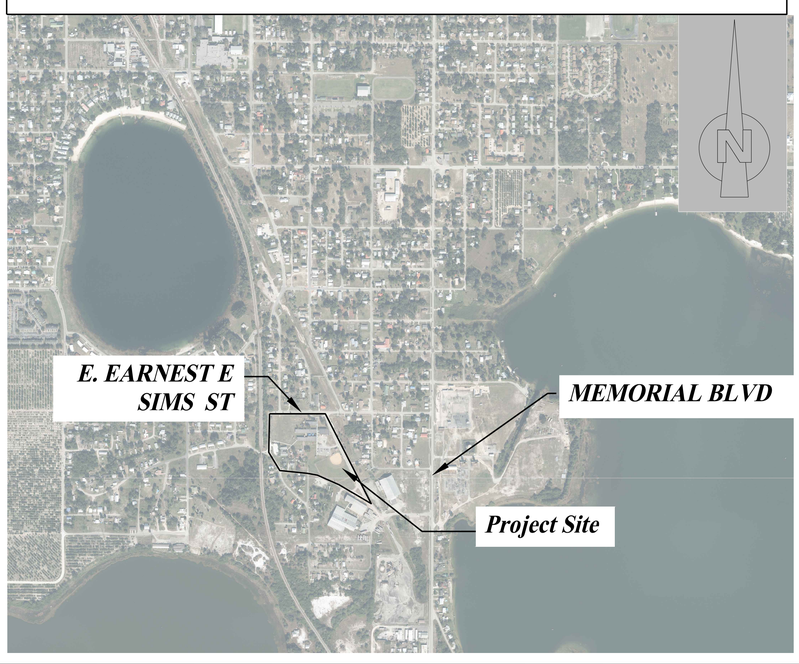

CALL before you dig.
811 or 1-800-432-4770
or visit
www.callsunshine.com

Notes

1.) Property Owner:
REDLANDS CHRISTIAN MIGRANT ASSOCIATION INC
402 W MAIN ST
IMMOKALEE, FL 34142-3933

2.) Consultant:
Cool and Cobb Engineering Co.
203 West Main Street
Avon Park, FL 33825
(863) 657-2323 Office
(863) 657-2324 Fax

3.) Surveyor:
Germaine Surveying Inc.
3803 Kenilworth Boulevard
Sebring, FL 33870
(863) 385-6856

4.) Legal Description:
SOUTHSIDE PARK SUB UNREC
PER OR 394-PGS 490 + 491 TRACTS A + C + ALL
BLK 1 + LOTS 1 TO 13 INC + 19 TO 25 INC BLK 9 +
ALL BLOCK 10 + OCCUPIED RDS ADJOINING BLKS 1+9+10
-HOPEWELL SCHOOL-

5.) Strap No =A-27-33-28-160-00A0-0000

6.) Total Acreage:
9.38 ac. (408,854sf)
4.04 ac. (176,047sf) Project Area

7.) Percentage of Impervious Area:
Existing: 36% 3.38 Acres
Demo 3.36% .336 Acres
Proposed: 16.05% 1.74 Acres
Total: 48.69% 5.456Acres

8.) FLOOD PLAIN ZONE: NO FLOOD PLAIN ON SITE

9.) FLOOD PLAIN ELEVATION: NO FLOOD PLAIN ON SITE

9.) Existing Land Use of Property:
PI

10.) Existing Zoning:
PI

11.) Permitted Land Use according to Future Land Use Map = PBG

12.) State and Federal Permits Required = SWFWMD, NPDES,CITY OF AVON PARK

13.) Floor Area Ratio:
Building sq. ft. / Land sq. ft.
Existing: 5.677%
Proposed: 12.96%
Total: 18.637%

14.) Maximum Lot Coverage:
30%

15.) Lands are to be dedicated to public entity.

16.) Water & Sewer to be tied into existing City of Avon Park Potable Water Main & Sewer Line.

17.) Call 48 hours before you dig 811 (Local No. 1-800-432-4770)

18.) No wellheads proposed for potable water supply.

19.) Maximum Height of Building
45'

20.) Dimensions and Elevations taken from survey dated 05/27/2022 of :
Germaine Surveying Inc.
Registered Land Surveyor # 3945
(Datum: NAVD 88)

21.) Testing Laboratory:
CENTRAL TESTING LABORATORY, INC.
130 Satellite CT
Phone # (352) 787-1268

22.) Required Parking Spaces:
1 Space Per Employee
1 Space Per 10 Kids

Total Employees=25=	25	Spaces Required
Total Students=140=	14	Spaces Required
Spaces Required=	39	
ADA Spaces Required=	2	
Parking Spaces Provided =	125	Standard Spaces
	5	Handicap Spaces
	130	Spaces Provided

Bicycle Parking :
1 Bicycle Space Per 10 Car Space = 4 Racks

23.) Landscaping and irrigation will be maintained by owner.

24.) Form Board Survey IS Required.

25.) Soil Type:
Astutala-Urban Land Complex

26.) Seasonal High Water Table:
APROXIMATLY 110.75'

27.) Setbacks Required - Front = 25'-0"
Rear = 20'-0"
Side = 10'-0"

28.) All disturbed areas to be soded with bahia sod and watered to ensure plant survival.

Notes Cont'd

29.) North Owner:
ERNEST E SIMS ST

30.) South Owner:
HATCHER AVE

SOORUJBALLY GOPATTIE
Strap #: A-27-33-28-160-0090-0180
Zoning: R1
151 HATCHER AVE
AVON PARK, FL 33825

WELLS LOUIS T +
ANDERSON FLORYNE M
STRAP #: A-27-33-28-160-0090-0160
ZONING: R1
155 HATCHER AVE
AVON PARK, FL 33825

CULBRETH OTIS C JR +
CULBRETH JEWELL ARLENE
STRAP #: A-27-33-28-160-0090-0150
ZONING: R1
1258 MEMORIAL DR
AVON PARK, FL 33825

OUSLEY ARTHUR
STRAP #:A-27-33-28-160-0090-0140
ZONING:R1
2526 29TH ST S
ST PETERSBURG, FL 33712

31.) West Owner:
STRONG AVE

32.) East Owner:
QUEEN COWARD AVE

33.) Contractor shall provide FDEP-NPDESS permit prior to construction.

34.) Contractor to provide AS-BUILT Survey at end of project.

FOR PERMITTING PURPOSES ONLY

PROJECT
HOFFMAN & FACUNDO ARCHITECTS
RCMA HOPEWELL CAMPUS
1301 STRONG AVE
AVON PARK FL, 33825

THIS ITEM HAS BEEN ELECTRONICALLY SIGNED BY JAMES "MASON" COBB, PE ON 10/07/2022 USING A DIGITAL SIGNATURE

PRINTED COPIES OF THIS DOCUMENT ARE NOT CONSIDERED SIGNED AND SEALED AND THE SIGNATURE MUST BE VERIFIED ON ANY ELECTRONIC COPIES.

SEAL
Digitally signed by James M Cobb
Date: 2022.10.07 11:31:31 -04'00'
James "Mason" Cobb, P.E.
Friday, October 07, 2022

ENGINEERS
Florida License Numbers:
Carl E. Cool, P.E. -16921
James "Mason" Cobb, P.E. - 78600
Kenneth F. Wheeler P.E.- 60417
ken@coolandcobb.com
carl@coolandcobb.com
mason@coolandcobb.com

ENGINEERING FIRM
Cool and Cobb Engineering Company
203 West Main Street
Avon Park, FL 33825
(863) 657-2323 Office
(863) 657-2324 Fax

REVISIONS:
7/25/22 BW

PROJECT #22-269-2434

C-1

SHEET 1 of 12

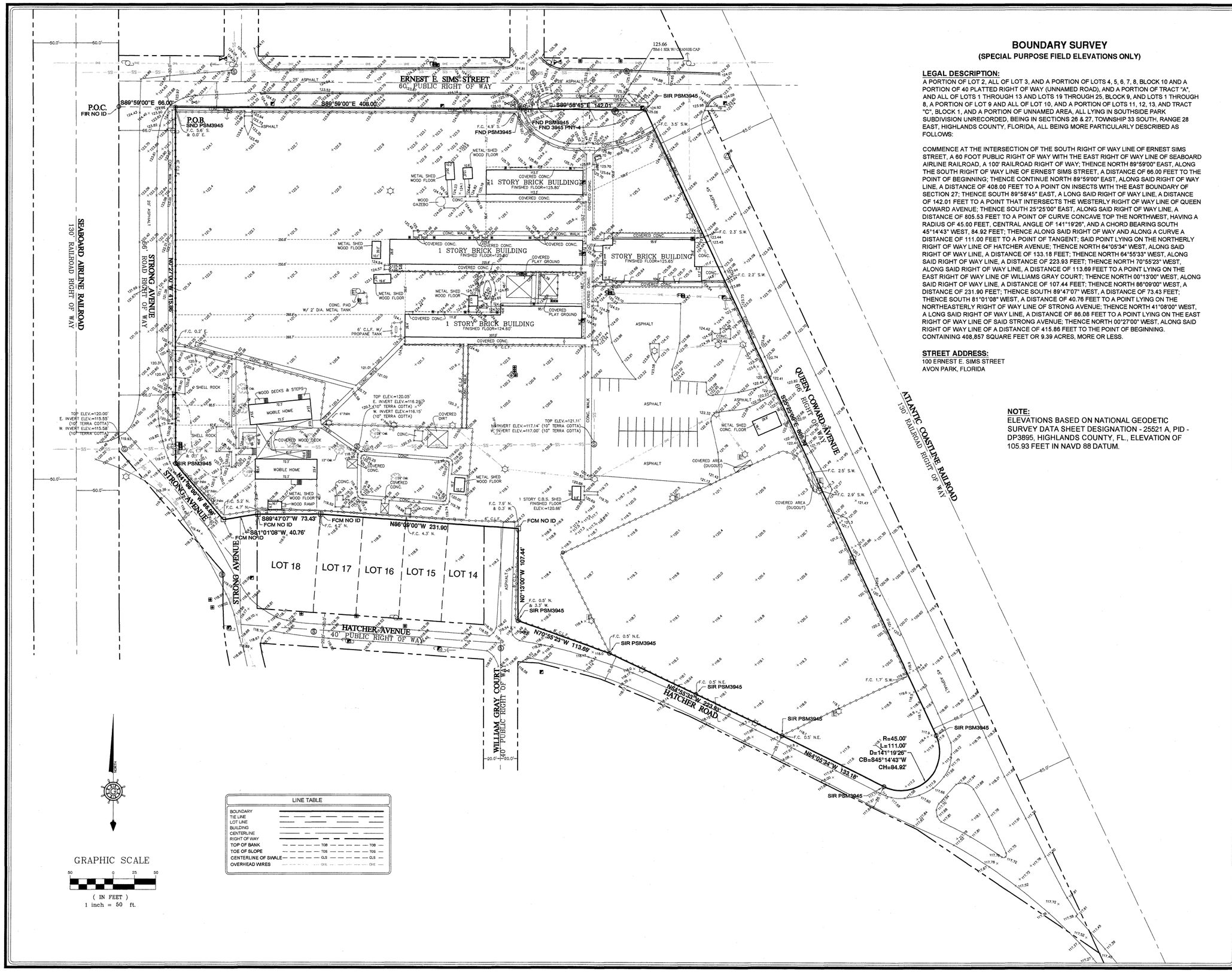

LINE TABLE	
BOUNDARY	
TIE LINE	
LOT LINE	
BUILDING	
CENTERLINE	
RIGHT OF WAY	
TOP OF BANK	TOB
TOE OF SLOPE	TOS
CENTERLINE OF SWALE	CLS
OVERHEAD WIRES	OHE

BOUNDARY SURVEY

(SPECIAL PURPOSE FIELD ELEVATIONS ONLY)

LEGAL DESCRIPTION:

A PORTION OF LOT 2, ALL OF LOT 3, AND A PORTION OF LOTS 4, 5, 6, 7, 8, BLOCK 10 AND A PORTION OF 40 PLATTED RIGHT OF WAY (UNNAMED ROAD), AND A PORTION OF TRACT "A", AND ALL OF LOTS 1 THROUGH 13 AND LOTS 19 THROUGH 25, BLOCK 9, AND LOTS 1 THROUGH 8, A PORTION OF LOT 9 AND ALL OF LOT 10, AND A PORTION OF LOTS 11, 12, 13, AND TRACT "C", BLOCK 1, AND A PORTION OF UNNAMED AREA, ALL LYING IN SOUTHSIDE PARK SUBDIVISION UNRECORDED, BEING IN SECTIONS 26 & 27, TOWNSHIP 33 SOUTH, RANGE 28 EAST, HIGHLANDS COUNTY, FLORIDA, ALL BEING MORE PARTICULARLY DESCRIBED AS FOLLOWS:

COMMENCE AT THE INTERSECTION OF THE SOUTH RIGHT OF WAY LINE OF ERNEST SIMS STREET, A 60 FOOT PUBLIC RIGHT OF WAY WITH THE EAST RIGHT OF WAY LINE OF SEABOARD AIRLINE RAILROAD, A 100' RAILROAD RIGHT OF WAY; THENCE NORTH 89°59'00" EAST, ALONG THE SOUTH RIGHT OF WAY LINE OF ERNEST SIMS STREET, A DISTANCE OF 66.00 FEET TO THE POINT OF BEGINNING; THENCE CONTINUE NORTH 89°59'00" EAST, ALONG SAID RIGHT OF WAY LINE, A DISTANCE OF 408.00 FEET TO A POINT ON INSECTS WITH THE EAST BOUNDARY OF SECTION 27; THENCE SOUTH 89°58'45" EAST, A LONG SAID RIGHT OF WAY LINE, A DISTANCE OF 142.01 FEET TO A POINT THAT INTERSECTS THE WESTERLY RIGHT OF WAY LINE OF QUEEN COWARD AVENUE; THENCE SOUTH 25°25'00" EAST, ALONG SAID RIGHT OF WAY LINE, A DISTANCE OF 505.53 FEET TO A POINT OF CURVE CONCAVE TOP THE NORTHWEST, HAVING A RADIUS OF 45.00 FEET, CENTRAL ANGLE OF 141°19'26", AND A CHORD BEARING SOUTH 45°14'43" WEST, 84.92 FEET; THENCE ALONG SAID RIGHT OF WAY AND ALONG A CURVE A DISTANCE OF 111.00 FEET TO A POINT OF TANGENT; SAID POINT LYING ON THE NORTHERLY RIGHT OF WAY LINE OF HATCHER AVENUE; THENCE NORTH 64°05'34" WEST, ALONG SAID RIGHT OF WAY LINE, A DISTANCE OF 133.18 FEET; THENCE NORTH 64°55'33" WEST, ALONG SAID RIGHT OF WAY LINE, A DISTANCE OF 223.93 FEET; THENCE NORTH 70°55'23" WEST, ALONG SAID RIGHT OF WAY LINE, A DISTANCE OF 113.69 FEET TO A POINT LYING ON THE EAST RIGHT OF WAY LINE OF WILLIAMS GRAY COURT; THENCE NORTH 00°13'00" WEST, ALONG SAID RIGHT OF WAY LINE, A DISTANCE OF 107.44 FEET; THENCE NORTH 86°09'00" WEST, A DISTANCE OF 231.90 FEET; THENCE SOUTH 89°47'07" WEST, A DISTANCE OF 73.43 FEET; THENCE SOUTH 81°01'08" WEST, A DISTANCE OF 40.76 FEET TO A POINT LYING ON THE NORTHEASTERLY RIGHT OF WAY LINE OF STRONG AVENUE; THENCE NORTH 41°08'00" WEST, A LONG SAID RIGHT OF WAY LINE, A DISTANCE OF 86.08 FEET TO A POINT LYING ON THE EAST RIGHT OF WAY LINE OF SAID STRONG AVENUE; THENCE NORTH 00°27'00" WEST, ALONG SAID RIGHT OF WAY LINE OF A DISTANCE OF 415.86 FEET TO THE POINT OF BEGINNING. CONTAINING 408,857 SQUARE FEET OR 9.39 ACRES, MORE OR LESS.

STREET ADDRESS:

100 ERNEST E. SIMS STREET
AVON PARK, FLORIDA

NOTE:

ELEVATIONS BASED ON NATIONAL GEODETIC SURVEY DATA SHEET DESIGNATION - 25521 A, PID - DP3895, HIGHLANDS COUNTY, FL., ELEVATION OF 105.93 FEET IN NAVD 88 DATUM.

GERMAINE SURVEYING INC.
PROFESSIONAL LAND SURVEYORS

3803 KENILWORTH BOULEVARD SEBRING, FLORIDA 33870
PHONE: 863-385-6856 FAX: 863-382-4531
EMAIL: INFO@GERMAINESURVEYING.COM
WEBSITE: GERMAINESURVEYING.COM

CLIENT:
HOFFMAN & FACUNDO ARCHITECTS, LLC

JOB#	232-09	SCALE: 1"=50'
DATE:	5-27-22	DRAWN BY: BAM
TASK:	004	CHECKED BY:

SURVEYOR'S CERTIFICATION:

I HEREBY CERTIFY THAT THIS DRAWING IS A TRUE AND CORRECT REPRESENTATION OF A SURVEY PERFORMED UNDER MY SUPERVISION, IN ACCORDANCE WITH THE STANDARDS OF PRACTICE ESTABLISHED FOR THE PROFESSION OF SURVEYING AND MAPPING AS SET FORTH IN CHAPTER 5 J-17, PURSUANT TO SECTION 472.027 FLORIDA STATUTES, AS ADOPTED BY THE FLORIDA BOARD OF PROFESSIONAL LAND SURVEYOR'S. SUBJECT TO EASEMENTS, RIGHTS- OF-WAYS, SETBACK LINES, UNDERGROUND UTILITIES, RESERVATIONS AND RESTRICTIONS OF RECORD.

GARY L. GERMAINE
FLORIDA PROFESSIONAL LAND SURVEYOR AND MAPPER
REGISTRATION #3945

UNLESS IT BEARS THE SIGNATURE AND THE ORIGINAL RAISED SEAL OF THIS FLORIDA LICENSED SURVEYOR AND MAPPER OR THE ELECTRONIC SIGNATURE AND/OR ORIGINAL SEAL OF THE LISTED FLORIDA LICENSED SURVEYOR AND MAPPER. THIS DRAWING, SKETCH, PLAT OR MAP IS FOR INFORMATIONAL PURPOSES ONLY AND SHOULD NOT BE CONSIDERED VALID. LICENSE BUSINESS #6017

GENERAL NOTES:

THIS SURVEY PREPARED FROM LEGAL DESCRIPTION PROVIDED AND IS NOT A CERTIFICATE OF TITLE.

SOME FEATURES SHOWN HEREON MAY BE OUT OF SCALE FOR CLARITY.

BEARING SYSTEM BASED ON THE EAST RIGHT OF WAY LINE OF SEABOARD AIR LINE RAILROAD AS BEING N00°27'00"W.

LEGEND OF SYMBOLS & ABBREVIATIONS

PG	PAGE
P.B.	PLAT BOOK
O.R.	OFFICIAL RECORD
R/W	RIGHT OF WAY
P.C.	POINT OF CURVE
P.T.	POINT OF TANGENT
P.R.C.	POINT OF REVERSE CURVE
P.C.C.	POINT OF COMPOUND CURVE
P.O.B.	POINT OF BEGINNING
P.O.C.	POINT OF COMMENCEMENT
F.I.R.	FOUND IRON ROD
F.I.P.	FOUND IRON PIPE
F.N.D.	FOUND NAIL & DISK
F.L.	FENCE LINE
F.C.	FENCE CORNER
CONC.	CONCRETE
B.F.P.	BACK FLOW PREVENTER
C.L.F.	CHAIN LINK FENCE
C.B.S.	CONCRETE BLOCK STRUCTURE
(P)	AS RECORDED ON PLAT
(D)	AS RECORDED ON DEED
(F)	AS MEASURED IN FIELD
(PRO)	PRORATED MEASUREMENT
F.C.M.	FOUND CONCRETE MONUMENT
S.C.M.	SET CONCRETE MONUMENT PSM 3945
S.I.R.	SET IRON ROD & CAP PSM 3945
S.N.D.	SET NAIL & DISK STAMPED PSM 3945

METER POST
POWER POLE
LIGHT POLE
GUY WIRE
ELECTRIC MANHOLE
ELECTRIC METER
ELECTRIC VAULT
ELECTRIC BOX
TRANSFORMER
AIR CONDITIONER UNIT
TELEPHONE MANHOLE
TELEPHONE BOX
CABLE BOX
VAULT
SIGN (AS NOTED)
TOWER
MONITORING WELL
FLAG POLE
WATER VALVE
FIRE HYDRANT
BACKFLOW PREVENTER
WATER METER
WELL
STORM DRAIN MANHOLE
STORM DRAIN INLET
GREASE TRAP
SEWER MANHOLE
SEWER VALVE
CLEAN OUT
GAS VALVE
GAS METER
HANDICAPPED PARKING
MITERED END SECTION
TRAFFIC SIGNAL BOX
SIGNAL LIGHT POLE
SIGNAL LIGHT
POINT OF ACCESS

REVISIONS

1	ADD TREE LOCATION ON 9-27-22 (BAM)
2	
3	
4	
5	

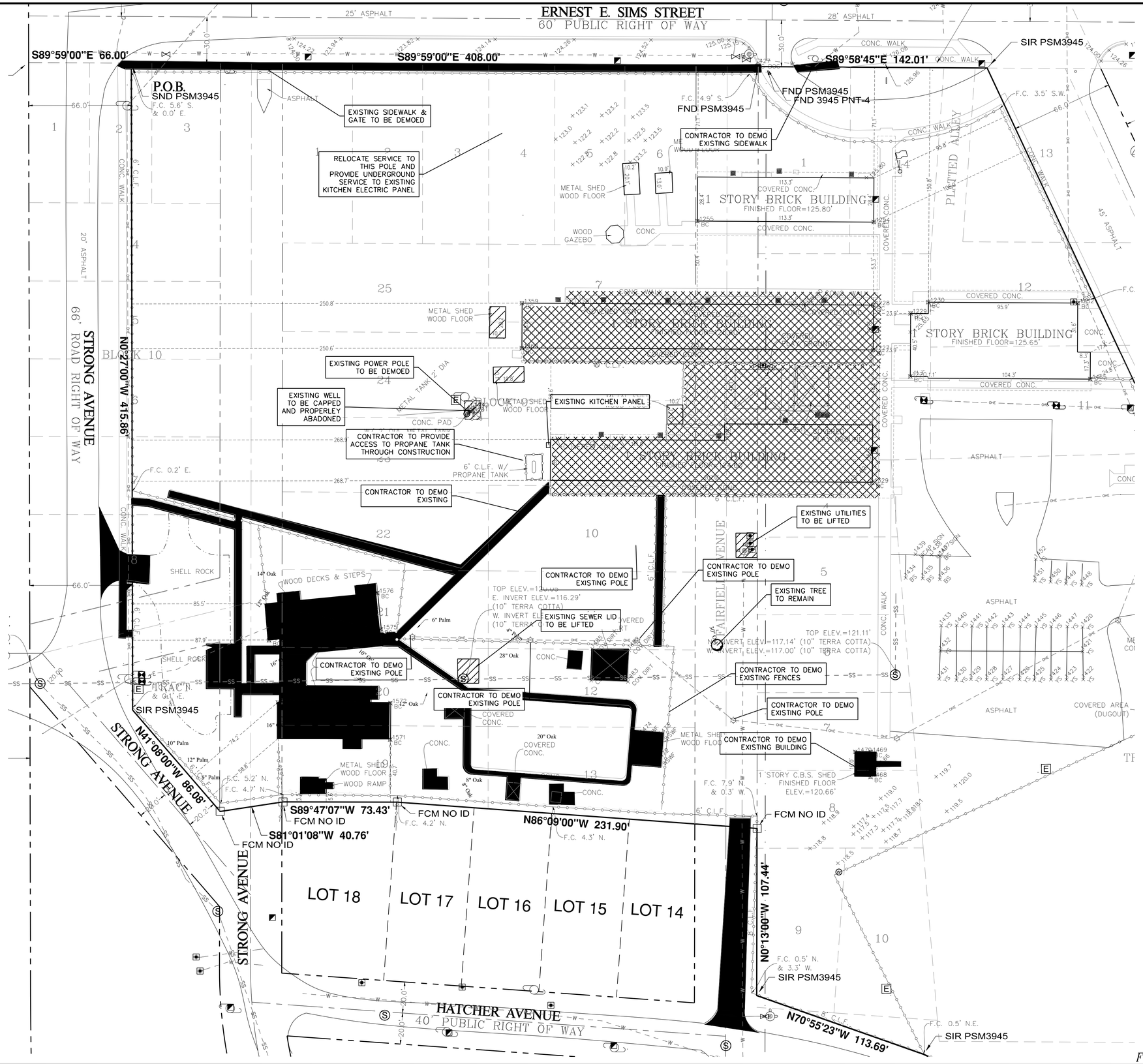

Demo Legend

- Demo
- Future demo once new day care is finished.
- Relocate

DEMO PLAN
1"=30'

FOR PERMITTING PURPOSES ONLY

PROJECT
HOFFMAN & FACUNDO ARCHITECTS
RCMA HOPEWELL CAMPUS
1301 STRONG AVE
AVON PARK FL, 33825

THIS ITEM HAS BEEN ELECTRONICALLY SIGNED BY JAMES "MASON" COBB, PE ON 10/7/2022
USING A DIGITAL SIGNATURE

PRINTED COPIES OF THIS DOCUMENT ARE NOT CONSIDERED SIGNED AND SEALED AND THE SIGNATURE MUST BE VERIFIED ON ANY ELECTRONIC COPIES.

SEAL
Digitally signed by James M Cobb
Date: 2022.10.07 11:36:56 -04'00'
James "Mason" Cobb, P.E.
Friday, October 07, 2022

ENGINEERS
Florida License Numbers:
Carl E. Cool, P.E. -16921
James "Mason" Cobb, P.E. - 78600
Kenneth F. Wheeler P.E.- 60417
ken@coolandcobb.com
carl@coolandcobb.com
mason@coolandcobb.com

ENGINEERING FIRM
Cool and Cobb Engineering Company
203 West Main Street
Avon Park, FL 33825
(863) 657-2323 Office
(863) 657-2324 Fax

REVISIONS:
7/12/22 BW

PROJECT #22-269-2434

C-2

SHEET 3 of 12

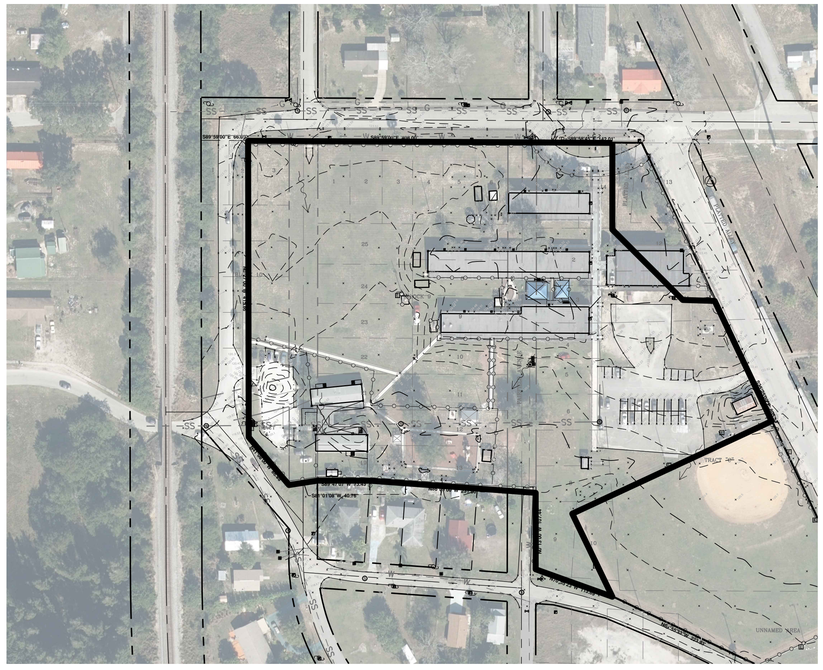

PRE BASIN
1"=100'

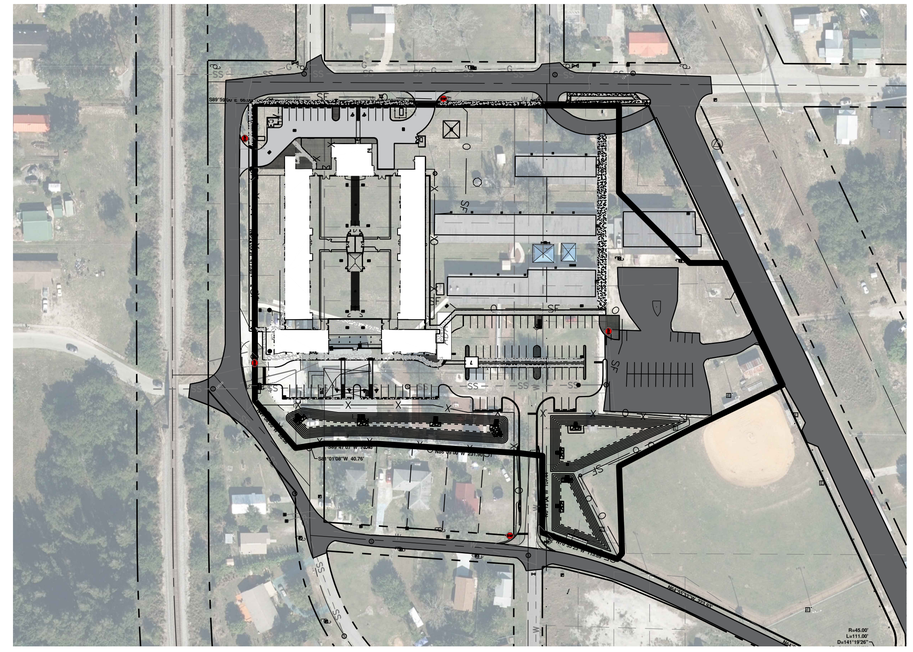

POST BASIN
1"=100'

LINE TABLE	
BOUNDARY	
BACK OF CURB	
CENTERLINE	
FACE OF CURB	
SETBACK	
RIGHT OF WAY	
TOP OF BANK	
TOE OF SLOPE	TOS
BOTTOM OF POND	
OVERHEAD WIRES	OHE
SILT FENCE	SF O
FIRE WATER MAIN 6"	FM FM
POTABLE WATER 2"	W2 W2
FENCE	
STORM WATER	STM
SANITARY SEWER	

PRE & POST BASIN
1"=100'

0 30' 60'
SCALE: 1" = 30'

N

FOR PERMITTING PURPOSES ONLY

PROJECT
HOFFMAN & FACUNDO ARCHITECTS
RCMA HOPEWELL CAMPUS
1301 STRONG AVE
AVON PARK FL, 33825

THIS ITEM HAS BEEN ELECTRONICALLY SIGNED BY JAMES "MASON" COBB, PE ON 10/7/2022. USING A DIGITAL SIGNATURE

PRINTED COPIES OF THIS DOCUMENT ARE NOT CONSIDERED SIGNED AND SEALED AND THE SIGNATURE MUST BE VERIFIED ON ANY ELECTRONIC COPIES.

SEAL
Digitally signed by James M Cobb
Date: 2022.10.07 11:37:51 -04'00'
James "Mason" Cobb, P.E.
Friday, October 07, 2022

ENGINEERS
Florida License Numbers:
Carl E. Cool, P.E. -16921
James "Mason" Cobb, P.E. - 78600
Kenneth F. Wheeler P.E.- 60417
ken@coolandcobb.com
carl@coolandcobb.com
mason@coolandcobb.com

ENGINEERING FIRM
Cool and Cobb
Engineering Company
203 West Main Street
Avon Park, FL 33825
(863) 657-2323 Office
(863) 657-2324 Fax

REVISIONS:
7/12/22 BW

PROJECT #22-269-2434

C-3

SHEET 4 of 12

S:\Project Files\2022 Projects\22-269-2434- RCMA Hopewell Campus\Drawings\Civil\22-269-10722-Site_Plan_for_Site_Plan.dwg Bisons Oct 07, 2022 8:23am by: rlee

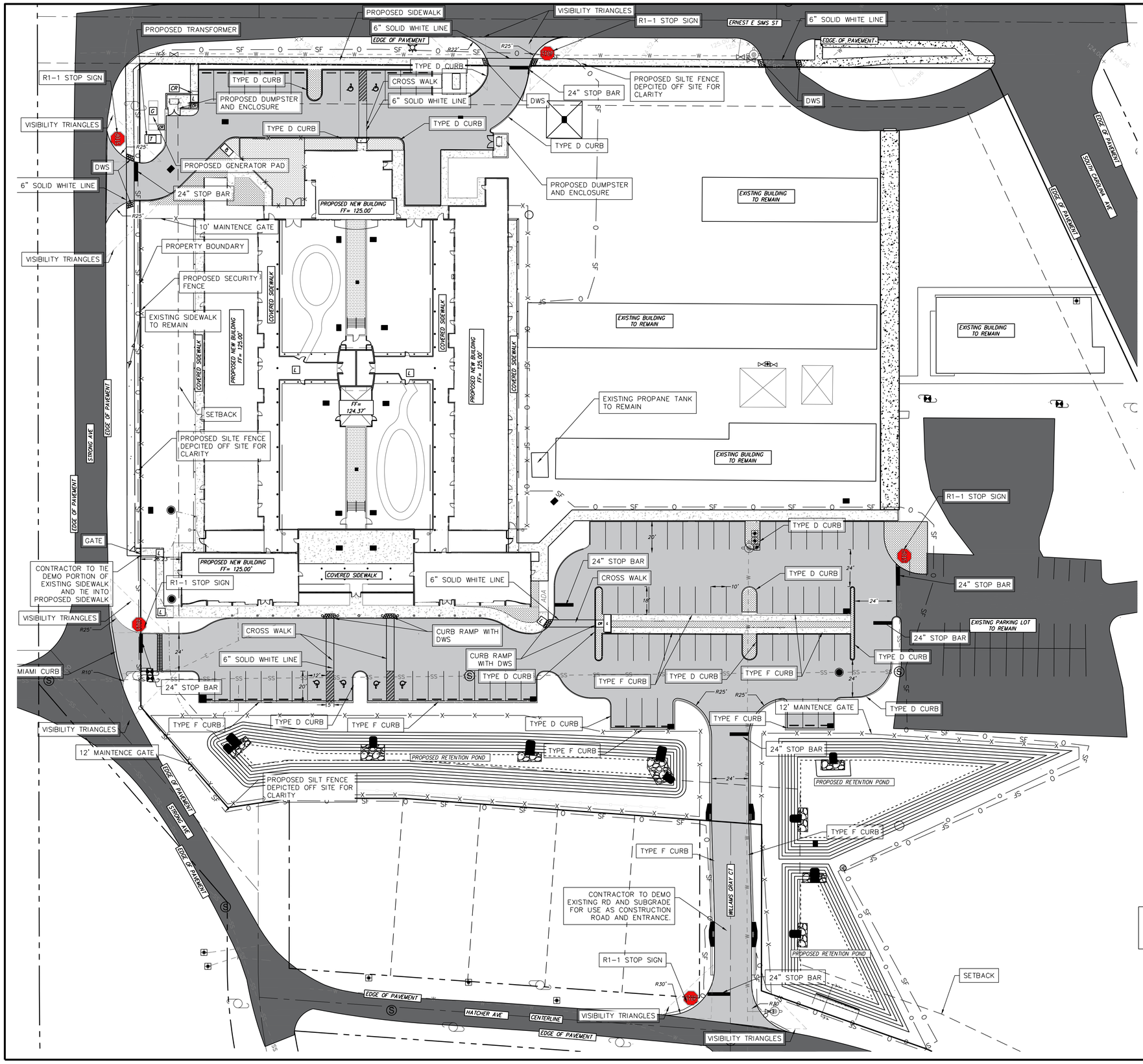

LINE TABLE	
BOUNDARY	
BACK OF CURB	
CENTERLINE	
FACE OF CURB	
SETBACK	
RIGHT OF WAY	
TOP OF BANK	
TOE OF SLOPE	TOS
BOTTOM OF POND	
OVERHEAD WIRES	OHE
SILT FENCE	SF
FIRE WATER MAIN 6"	FM
POTABLE WATER 2"	W2
FENCE	
STORM WATER	STM
SANITARY SEWER	

Site Legend

- Stop Sign
- 24" Stop Bar
- ADA Parking Stall
- Proposed Asphalt
- Existing Asphalt
- Existing Concrete
- Proposed Concrete
- Proposed RipRap
- Proposed Landscaping
- CR — Proposed Curb Ramp
- L — Proposed Landing (2% Max Slope)
- DWS — Detectable Warning Strip
- TOC — Top of Curb
- G — Generator Pad
- T — Transformer
- Sanitary Sewer Manhole
- Stormwater Grate Inlet
- Curb Inlet
- Mitered End
- ADA — ADA Ramp

SITE PLAN
1"=30'

FOR PERMITTING PURPOSES ONLY

PROJECT
HOFFMAN & FACUNDO ARCHITECTS
RCMA HOPEWELL CAMPUS
1301 STRONG AVE
AVON PARK FL, 33825

THIS ITEM HAS BEEN ELECTRONICALLY SIGNED BY JAMES "MASON" COBB, PE ON 10/7/2022 USING A DIGITAL SIGNATURE

PRINTED COPIES OF THIS DOCUMENT ARE NOT CONSIDERED SIGNED AND SEALED AND THE SIGNATURE MUST BE VERIFIED ON ANY ELECTRONIC COPIES.

SEAL
Digitally signed by James M Cobb
Date: 2022.10.07 11:39:40 -04'00'
James "Mason" Cobb, P.E.
Friday, October 07, 2022

ENGINEERS
Florida License Numbers:
Carl E. Cool, P.E. -16921
James "Mason" Cobb, P.E. - 78600
Kenneth F. Wheeler P.E.- 60417
ken@coolandcobb.com
carl@coolandcobb.com
mason@coolandcobb.com

ENGINEERING FIRM
Cool and Cobb Engineering Company
203 West Main Street
Avon Park, FL 33825
(863) 657-2323 Office
(863) 657-2324 Fax

REVISIONS:

7/12/22 BW	

PROJECT #22-269-2434

C-4

SHEET 5 of 12

S:\Project Files\2022 Projects\2022 Awarded Projects\22-269-2434- RCMA Hopewell Campus\Drawings\Civil\22-269-10722-Site_plan_Site_Data_Notes.dwg 3D4 Oct 07, 2022 9:23am by User

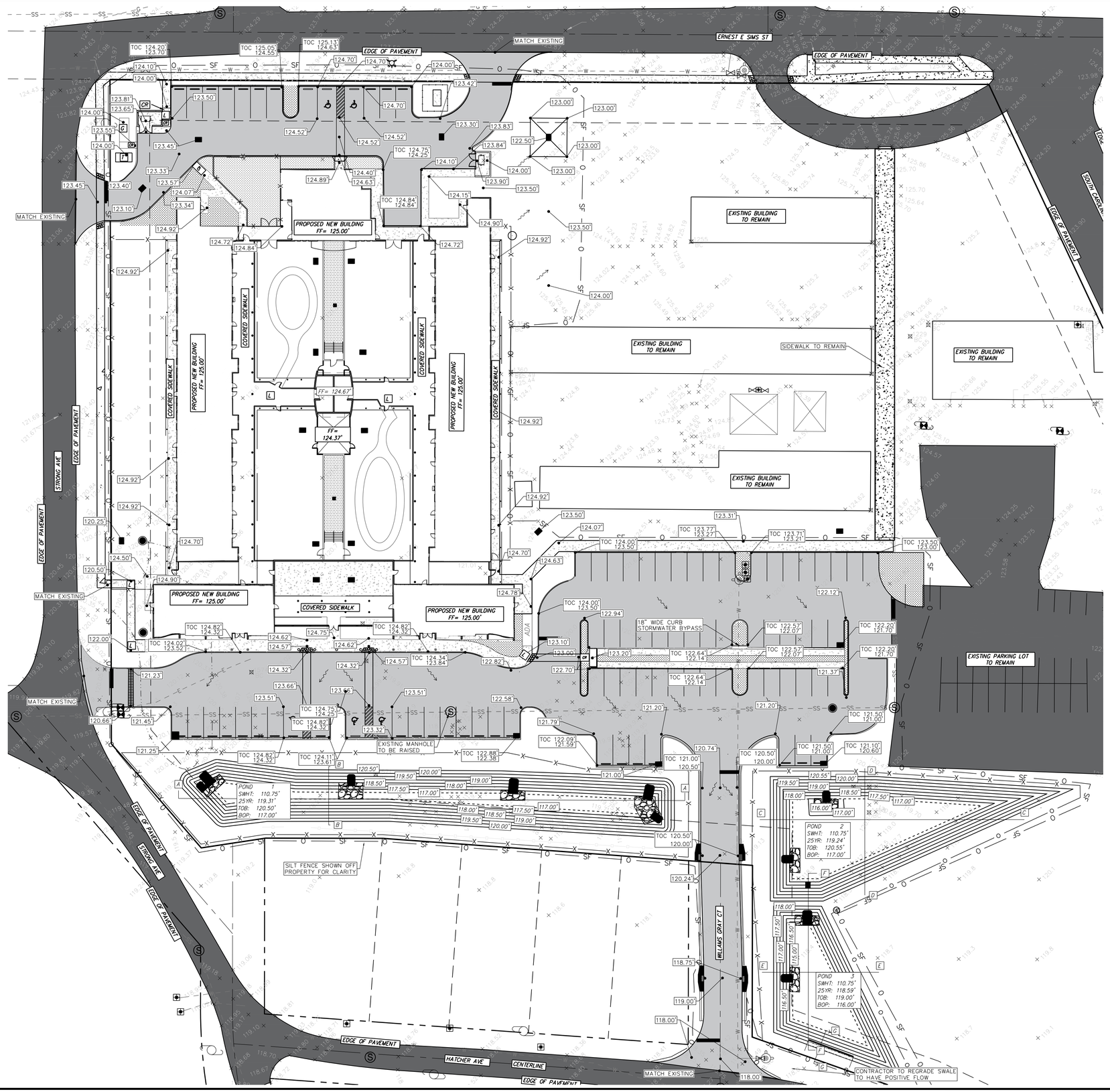

0 30' 60'
SCALE: 1" = 30'

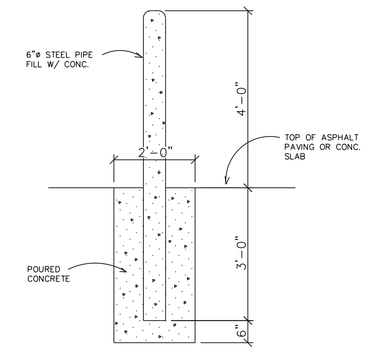

BOLLARD DETAIL

NOTE:
INJECTION MOLDED FITTING ARE AVAILABLE IN TEES, WYES, REDUCERS, 45° BENDS AND BELL/BELL COUPLERS WATER TIGHT (WT) JOINTS SHOWN. SOIL-TIGHT (ST) FITTINGS ARE ALSO AVAILABLE

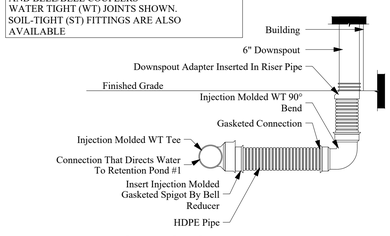

DOWNSPOUT DETAIL

LINE TABLE

BOUNDARY	
BACK OF CURB	
CENTERLINE	
FACE OF CURB	
SETBACK	
RIGHT OF WAY	
TOP OF BANK	
TOE OF SLOPE	TOS
BOTTOM OF POND	
OVERHEAD WIRES	OHE
SILT FENCE	SF
FIRE WATER MAIN 6"	FM
POTABLE WATER 2"	W2
FENCE	
STORM WATER	STM
SANITARY SEWER	

GRADING 1 OF 2
1"=30'

Grading Legend

- Proposed Elevation
- Proposed Elevation w/ Top of Curb or TOC
- Sewer Manhole
- Inlet Box
- ADA Parking Stall
- Proposed Asphalt
- Proposed Concrete
- Proposed RipRap
- Proposed Landscaping
- Proposed Curb Ramp
- Proposed Landing (1.5% Max Slope)
- Running Slope 5% Max Longitudinal 2% Perpendicular Slope
- Generator Pad
- Transformer

FOR PERMITTING PURPOSES ONLY

PROJECT
HOFFMAN & FACUNDO ARCHITECTS
RCMA HOPEWELL CAMPUS
1301 STRONG AVE
AVON PARK FL, 33825

THIS ITEM HAS BEEN ELECTRONICALLY SIGNED BY JAMES "MASON" COBB, PE ON 10/07/2022 USING A DIGITAL SIGNATURE

PRINTED COPIES OF THIS DOCUMENT ARE NOT CONSIDERED SIGNED AND SEALED AND THE SIGNATURE MUST BE VERIFIED ON ANY ELECTRONIC COPIES.

SEAL
Digitally signed by James M Cobb
Date: 2022.10.07 11:40:56 -04'00'
James "Mason" Cobb, P.E.
Friday, October 07, 2022

ENGINEERS
Florida License Numbers:
Carl E. Cool, P.E. -16921
James "Mason" Cobb, P.E. - 78600
Kenneth F. Wheeler P.E.- 60417
ken@coolandcobb.com
carl@coolandcobb.com
mason@coolandcobb.com

ENGINEERING FIRM
Cool and Cobb Engineering Company
203 West Main Street
Avon Park, FL 33825
(863) 657-2323 Office
(863) 657-2324 Fax

REVISIONS:
7/12/22 BW

PROJECT #22-269-2434

C-5

SHEET 6 of 12

S:\Project Files\2022 Projects\2022 Awarded Projects\22-269-2434- RCMA Hopewell Campus\Drawings\Civil\22-269-2434_Site_Plan.dwg gradingg Oct 07, 2022 9:24am by User

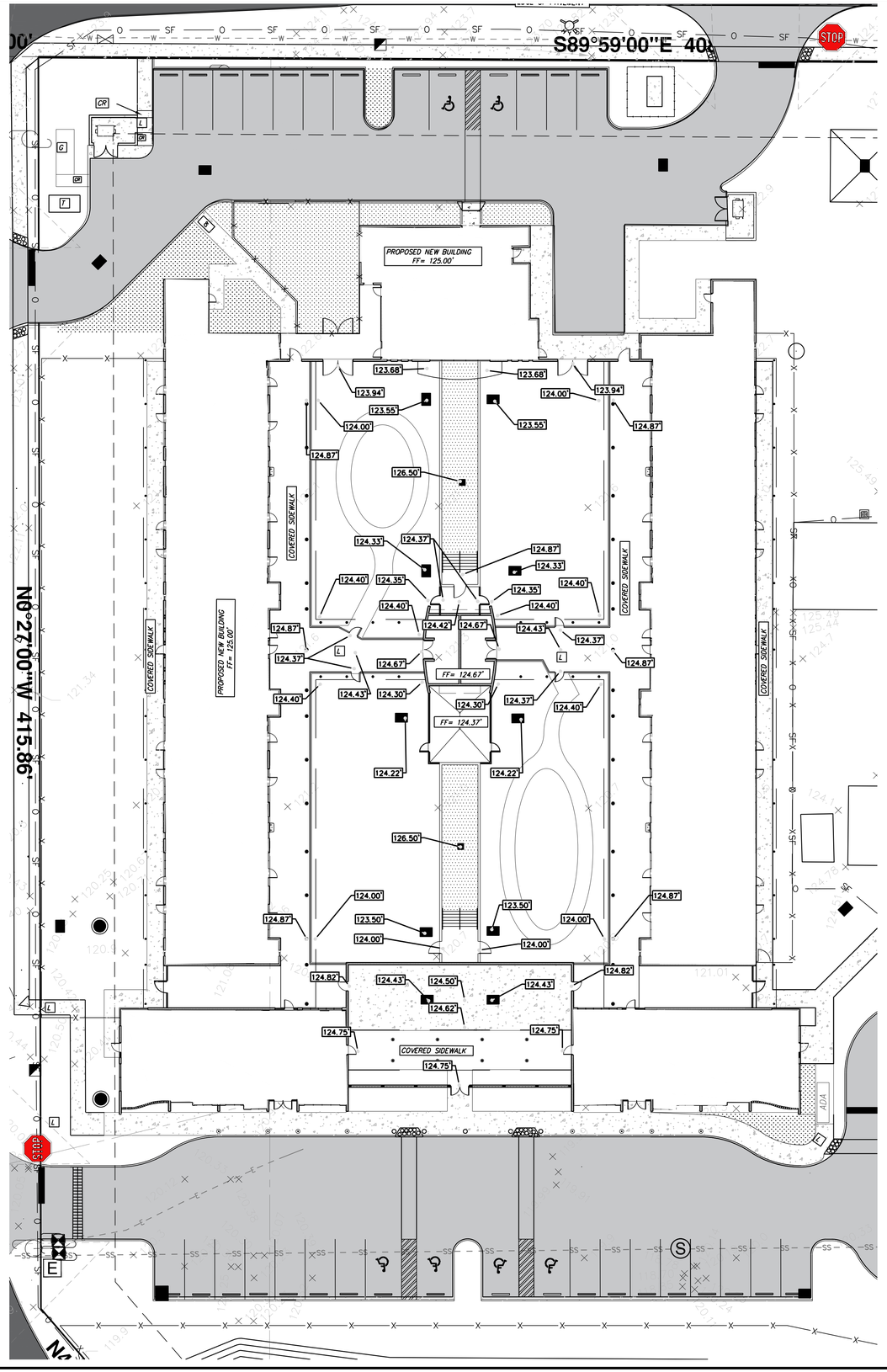

SCALE: 1" = 20'

LINE TABLE
BOUNDARY
BACK OF CURB
CENTERLINE
FACE OF CURB
SETBACK
RIGHT OF WAY
TOP OF BANK
TOE OF SLOPE
BOTTOM OF POND
OVERHEAD WIRES
SILT FENCE
FIRE WATER MAIN 6"
POTABLE WATER 2"
FENCE
STORM WATER
SANITARY SEWER

GRADING 2 OF 2
1"=20'

Grading Legend

- Proposed Elevation
- Proposed Elevation w/ Top of Curb or TOC
- Sewer Manhole
- Inlet Box
- ADA Parking Stall
- Proposed Asphalt
- Proposed Concrete
- Proposed RipRap
- Proposed Landscaping
- Proposed Curb Ramp
- Proposed Landing (1.5% Max Slope)
- Running Slope 5% Max Longitudinal 2% Perpendicular Slope
- Generator Pad
- Transformer

FOR PERMITTING PURPOSES ONLY

PROJECT
HOFFMAN & FACUNDO ARCHITECTS
RCMA HOPEWELL CAMPUS
1301 STRONG AVE
AVON PARK FL, 33825

THIS ITEM HAS BEEN ELECTRONICALLY SIGNED BY JAMES "MASON" COBB, PE ON 10/7/2022 USING A DIGITAL SIGNATURE

PRINTED COPIES OF THIS DOCUMENT ARE NOT CONSIDERED SIGNED AND SEALED AND THE SIGNATURE MUST BE VERIFIED ON ANY ELECTRONIC COPIES.

SEAL
Digitally signed by James M Cobb
Date: 2022.10.07 11:43:54 -04'00'
James "Mason" Cobb, P.E.
Friday, October 07, 2022

ENGINEERS
Florida License Numbers:
Carl E. Cool, P.E. -16921
James "Mason" Cobb, P.E. - 78600
Kenneth F. Wheeler P.E.- 60417
ken@coolandcobb.com
carl@coolandcobb.com
mason@coolandcobb.com

ENGINEERING FIRM
Cool and Cobb Engineering Company
203 West Main Street
Avon Park, Fl. 33825
(863) 657-2323 Office
(863) 657-2324 Fax

REVISIONS:

7/12/22 BW	

PROJECT #22-269-2434

C-6

SHEET 7 of 12

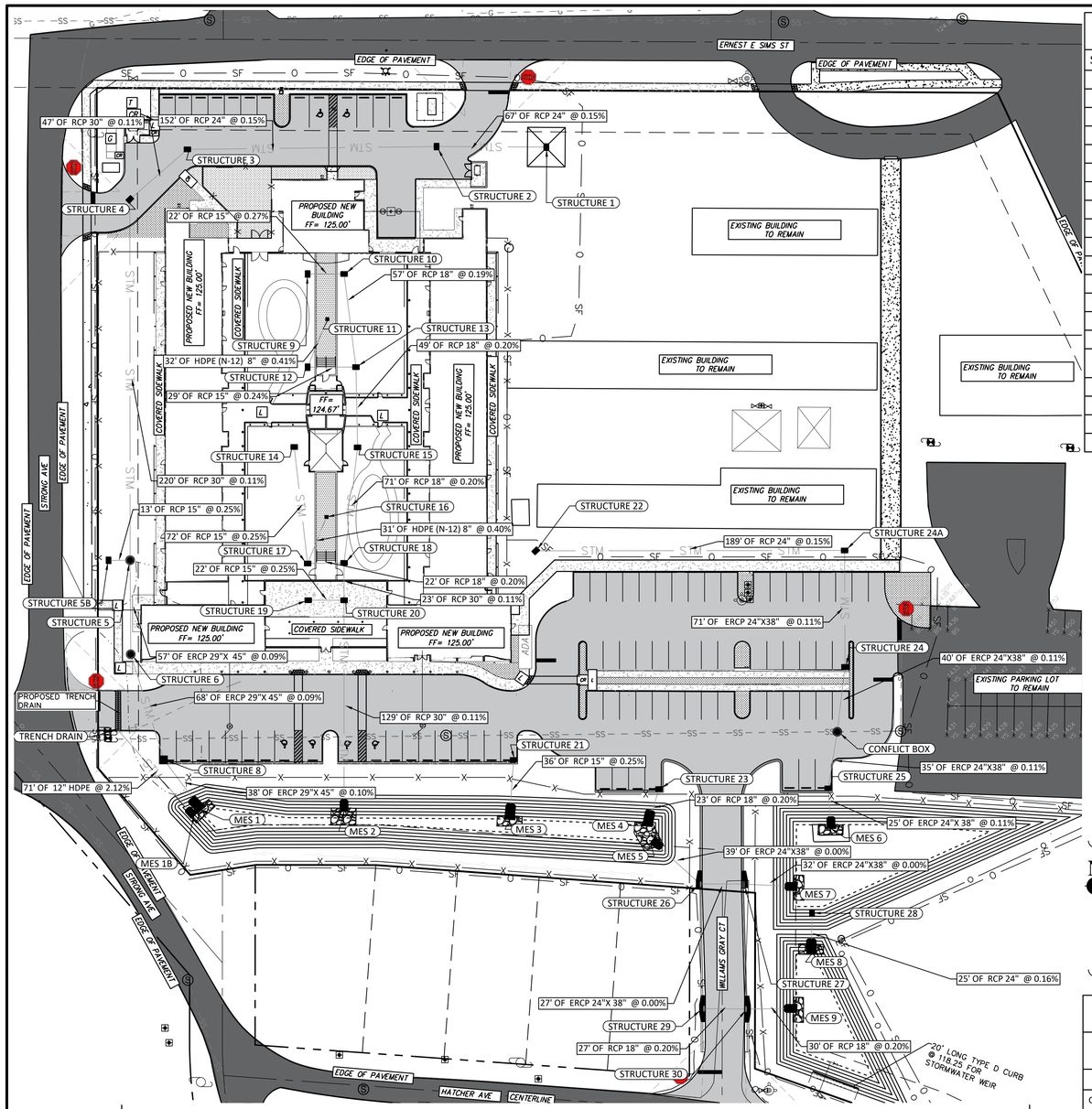

STRUCTURE TABLE

STRUCTURE NAME	DESCRIPTION	TOP EL.	PIPES IN	PIPES OUT
CONFLICT BOX	CONFLICT BOX	121.20	N: 115.75	S: 115.75
MES 1	MITERED END		NW: 117.66	
MES 1B	MITERED END		NW: 117.66	
MES 2	MITERED END		N: 119.00	
MES 3	MITERED END		N: 117.00	
MES 4	MITERED END		N: 117.00	
MES 5	MITERED END			SE: 117.00
MES 6	MITERED END		N: 115.68	
MES 7	MITERED END		W: 117.00	
MES 8	MITERED END		N: 116.00	
MES 9	MITERED END		W: 115.00	
STRUCTURE 1	TYPE C DITCH BOTTOM INLET	122.50		W: 118.46
STRUCTURE 2	TYPE C INLET	123.30	E: 118.36	W: 118.35
STRUCTURE 3	TYPE D INLET	123.45	E: 118.12	SW: 118.11
STRUCTURE 4	TYPE D INLET	123.10	NE: 118.06	S: 118.05
STRUCTURE 5	MAN HOLE	121.75	N: 117.81	S: 117.81 W: 117.84
STRUCTURE 5B	TYPE C DITCH BOTTOM	120.25	E: 117.81	
STRUCTURE 6	MAN HOLE	122.00	N: 117.76	S: 117.76
STRUCTURE 8	TYPE D INLET	121.27	N: 117.70	SE: 117.70
STRUCTURE 9	TYPE C INLET	123.55		E: 119.61

STRUCTURE TABLE

STRUCTURE NAME	DESCRIPTION	TOP EL.	PIPES IN	PIPES OUT
STRUCTURE 10	TYPE C INLET	123.55	W: 119.55	S: 119.55
STRUCTURE 11	12"X12" YARD BOX	127.00		S: 119.64
STRUCTURE 12	TYPE C INLET	124.33	N: 119.51	E: 119.51
STRUCTURE 13	TYPE C INLET	124.33	N: 119.44 W: 119.44	S: 119.44
STRUCTURE 14	TYPE C INLET	124.22		S: 119.41
STRUCTURE 15	TYPE D INLET	124.22	N: 119.34	S: 119.33
STRUCTURE 16	12"X12" YARD DRAIN	127.00		S: 119.35
STRUCTURE 17	TYPE C INLET	123.50	N: 119.23 N: 119.23	E: 119.22
STRUCTURE 18	TYPE D INLET	123.50	N: 119.19 W: 119.18	S: 119.18
STRUCTURE 19	TYPE D INLET	124.43		E: 119.21
STRUCTURE 20	TYPE D INLET	124.43	W: 119.16 N: 119.16	S: 119.14
STRUCTURE 21	TYPE C INLET	122.38		S: 117.09
STRUCTURE 22	TYPE C INLET	123.50		E: 116.17
STRUCTURE 23	TYPE C INLET	121.00		S: 117.05
STRUCTURE 24	TYPE D INLET	121.69	N: 115.80	S: 115.80
STRUCTURE 24A	TYPE D INLET	123.00	W: 115.88	S: 115.88
STRUCTURE 25	TYPE D INLET	120.60	N: 115.71	S: 115.71
STRUCTURE 26	CURB INLET	119.50	NW: 117.00	E: 117.00
STRUCTURE 27	CURB INLET	120.00	W: 117.00	E: 117.00
STRUCTURE 28	OUTFLOW STRUCTURE			S: 116.04

LINE TABLE

BOUNDARY
BACK OF CURB
CENTERLINE
FACE OF CURB
SETBACK
RIGHT OF WAY
TOP OF BANK
TOE OF SLOPE
BOTTOM OF POND
OVERHEAD WIRES
SILT FENCE
FIRE WATER MAIN 6"
POTABLE WATER 2"
FENCE
STORM WATER
SANITARY SEWER

Storm Water Legend

- Type 5 Inlet
- INLET
- Type 6 Inlet
- Pipe Cap
- Mitered End Section
- Proposed Asphalt
- Proposed Concrete
- Proposed RipRap

STRUCTURE TABLE

STRUCTURE NAME	DESCRIPTION	TOP EL.	PIPES IN	PIPES OUT
STRUCTURE 29	CURB INLET			E: 115.12
STRUCTURE 30	CURB INLET		W: 115.07	E: 115.06
Trench Drain	TYPE D INLET	120.66		SE: 119.16

STORMWATER
1"=40'

SCALE: 1" = 40'

FOR PERMITTING PURPOSES ONLY

PIPE TABLE

PIPE ID	UP/STREAM STRUCTURE	DOWN/STREAM STRUCTURE	LENGTH (FT)	PIPE SHAPE	PIPE SIZE	SLOPE (%)	UP/STREAM INVERT (FT)	DOWN/STREAM INVERT (FT)
ST 19 TO ST 20	STRUCTURE 19"	STRUCTURE 20'	21.90	Circular	15 inch Concrete Pipe	0.25%	119.21	119.16
ST 20 TO MES 2	STRUCTURE 20"	MES 2'	129.02	Circular	30 inch Concrete Pipe	0.11%	119.14	119.00
ST 22 TO ST 24A	STRUCTURE 22"	STRUCTURE 24A'	188.61	Circular	24 inch Concrete Pipe	0.15%	116.17	115.88
ST 23 TO MES 4	STRUCTURE 23"	MES 4'	23.37	Circular	18 inch Concrete Pipe	0.20%	117.05	117.00
ST 24 TO CF BOX	STRUCTURE 24"	CONFLICT BOX'	39.90	Horizontal Elliptical	38 x 24 inch Concrete Horizontal Elliptical Culvert	0.11%	115.80	115.75
ST 26 TO MES 5	MES 5"	STRUCTURE 26'	39.42	Horizontal Elliptical	38 x 24 inch Concrete Horizontal Elliptical Culvert	0.00%	117.00	117.00
ST 26 TO ST 27	STRUCTURE 27"	STRUCTURE 26'	26.88	Horizontal Elliptical	38 x 24 inch Concrete Horizontal Elliptical Culvert	0.00%	117.00	117.00
ST 27 TO MES 7	STRUCTURE 27"	MES 7'	32.37	Horizontal Elliptical	38 x 24 inch Concrete Horizontal Elliptical Culvert	0.00%	117.00	117.00
ST 28 TO MES 8	STRUCTURE 28"	MES 8'	25.23	Circular	24 inch Concrete Pipe	0.16%	116.04	116.00
ST 29 TO ST 30	STRUCTURE 29"	STRUCTURE 30'	26.60	Circular	18 inch Concrete Pipe	0.20%	115.12	115.07
ST 30 TO MES 9	STRUCTURE 30"	MES 9'	30.24	Circular	18 inch Concrete Pipe	0.20%	115.06	115.00
ST24A TO ST 24	STRUCTURE 24"	STRUCTURE 24A'	71.17	Horizontal Elliptical	38 x 24 inch Concrete Horizontal Elliptical Culvert	0.11%	115.80	115.88
ST25 TO MES 6	STRUCTURE 25"	MES 6'	24.58	Horizontal Elliptical	38 x 24 inch Concrete Horizontal Elliptical Culvert	0.11%	115.71	115.68
TRENCH DRAIN TO MES 1B	TRENCH DRAIN"	MES 1B'	70.80	Circular	12 inch HDPE Pipe	2.12%	119.16	117.66

PIPE TABLE

PIPE ID	UP/STREAM STRUCTURE	DOWN/STREAM STRUCTURE	LENGTH (FT)	PIPE SHAPE	PIPE SIZE	SLOPE (%)	UP/STREAM INVERT (FT)	DOWN/STREAM INVERT (FT)
ST 15 TO ST 18	STRUCTURE 15"	STRUCTURE 18'	71.08	Circular	18 inch Concrete Pipe	0.20%	119.33	119.19
CF BOX TO ST 25	CONFLICT BOX"	STRUCTURE 25'	35.05	Horizontal Elliptical	45 x 29 inch Concrete Horizontal Elliptical Culvert	0.11%	115.75	115.71
ST 21 TO MES 3	STRUCTURE 21"	MES 3'	36.30	Circular	15 inch Concrete Pipe	0.25%	117.09	117.00
ST 1 TO ST 2	STRUCTURE 1"	STRUCTURE 2'	67.03	Circular	24 inch Concrete Pipe	0.15%	118.46	118.36
ST 2 TO ST 3	STRUCTURE 2"	STRUCTURE 3'	152.16	Circular	24 inch Concrete Pipe	0.15%	118.35	118.12
ST 3 TO ST 4	STRUCTURE 3"	STRUCTURE 4'	46.60	Circular	30 inch Concrete Pipe	0.11%	118.11	118.06
ST 4 TO ST 5	STRUCTURE 4"	STRUCTURE 5'	220.48	Circular	30 inch Concrete Pipe	0.11%	118.05	117.81
ST 5 TO ST 6	STRUCTURE 5"	STRUCTURE 6'	57.48	Horizontal Elliptical	45 x 29 inch Concrete Horizontal Elliptical Culvert	0.09%	117.81	117.76
ST 5B TO ST 5	STRUCTURE 5B"	STRUCTURE 5'	13.17	Circular	15 inch Concrete Pipe	0.25%	117.81	117.84
ST 6 TO ST 8	STRUCTURE 6"	STRUCTURE 8'	67.61	Horizontal Elliptical	45 x 29 inch Concrete Horizontal Elliptical Culvert	0.09%	117.76	117.70
ST 8 TO MES 1	STRUCTURE 8"	MES 1'	38.13	Horizontal Elliptical	45 x 29 inch Concrete Horizontal Elliptical Culvert	0.10%	117.70	117.66
ST 9 TO ST 10	STRUCTURE 9"	STRUCTURE 10'	22.24	Circular	15 inch Concrete Pipe	0.27%	119.61	119.55
ST 10 TO ST 13	STRUCTURE 10"	STRUCTURE 13'	57.39	Circular	18 inch Concrete Pipe	0.19%	119.55	119.44
ST 11 TO ST 12	STRUCTURE 11"	STRUCTURE 12'	31.74	Circular	8.0 inch PVC Pipe	0.41%	119.64	119.51
ST 12 TO ST 13	STRUCTURE 13"	STRUCTURE 12'	29.49	Circular	15 inch Concrete Pipe	0.24%	119.44	119.51
ST 13 TO ST 15	STRUCTURE 13"	STRUCTURE 15'	49.05	Circular	18 inch Concrete Pipe	0.20%	119.44	119.34
ST 14 TO ST 17	STRUCTURE 14"	STRUCTURE 17'	71.67	Circular	15 inch Concrete Pipe	0.25%	119.41	119.23
ST 16 TO ST 17	STRUCTURE 16"	STRUCTURE 17'	30.66	Circular	8.0 inch PVC Pipe	0.40%	119.35	119.23
ST 17 TO ST 18	STRUCTURE 17"	STRUCTURE 18'	22.24	Circular	18 inch Concrete Pipe	0.20%	119.22	119.18
ST 18 TO ST 20	STRUCTURE 18"	STRUCTURE 20'	22.84	Circular	30 inch Concrete Pipe	0.11%	119.18	119.16

PROJECT
HOFFMAN & FACUNDO ARCHITECTS
RCMA HOPEWELL CAMPUS
1301 STRONG AVE
AVON PARK FL, 33825

THIS ITEM HAS BEEN ELECTRONICALLY SIGNED BY JAMES "MASON" COBB, PE ON 10/7/2022
USING A DIGITAL SIGNATURE
PRINTED COPIES OF THIS DOCUMENT ARE NOT CONSIDERED SIGNED AND SEALED AND THE SIGNATURE MUST BE VERIFIED ON ANY ELECTRONIC COPIES.

SEAL
Digitally signed by James M Cobb
Date: 2022.10.07 11:44:38 -04'00'
James "Mason" Cobb, P.E.
Friday, October 07, 2022

ENGINEERS
Florida License Numbers:
Carl E. Cool, P.E. -16921
James "Mason" Cobb, P.E. - 78600
Kenneth F. Wheeler P.E.- 60417
ken@coolandcobb.com
carl@coolandcobb.com
mason@coolandcobb.com

ENGINEERING FIRM
Cool and Cobb Engineering Company
203 West Main Street
Avon Park, FL 33825
(863) 657-2323 Office
(863) 657-2324 Fax

REVISIONS:
7/12/22 BW

PROJECT #22-269-2434

C-7

SHEET 8 of 12

S:\Project Files\2022 Projects\22-269-2434- RCMA Hopewell Campus\Drawings\Civil\22-269-TOTAL-Site_Plan_Dev_Plans_Rev_Plans_Rev_Plans_Rev_Plans.dwg Layout: C-7 Oct 07, 2022 9:26am by: User

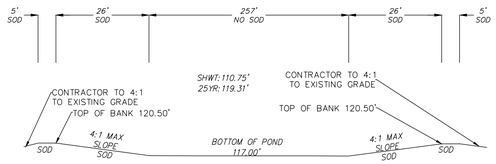

POND 1
SECTION A-A
NTS

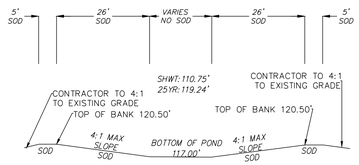

POND 2
SECTION C-C
NTS

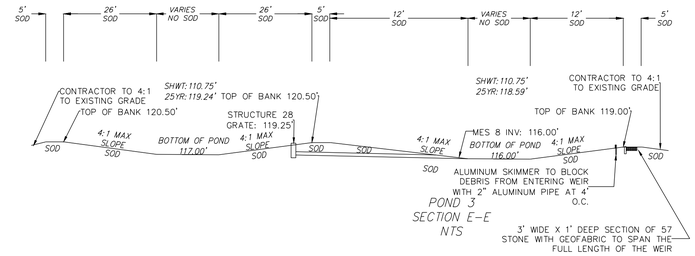

POND 3
SECTION E-E
NTS

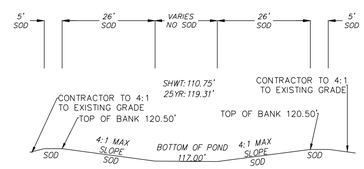

POND 1
SECTION B-B
NTS

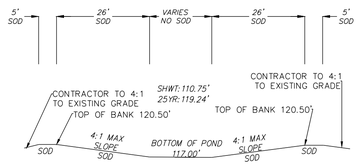

POND 2
SECTION D-D
NTS

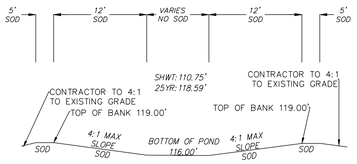

POND 3
SECTION F-F
NTS

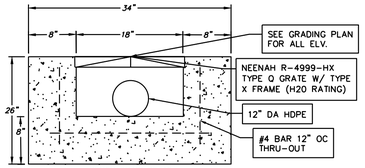

TRENCH DRAIN DETAIL
NTS

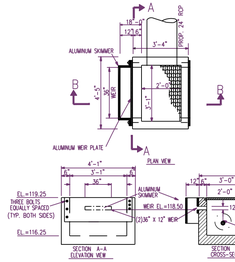

FDOT INLET TYPE "C"
STRUCTURE 28
WITH WEIR AND SKIMMER
SCALE: NTS

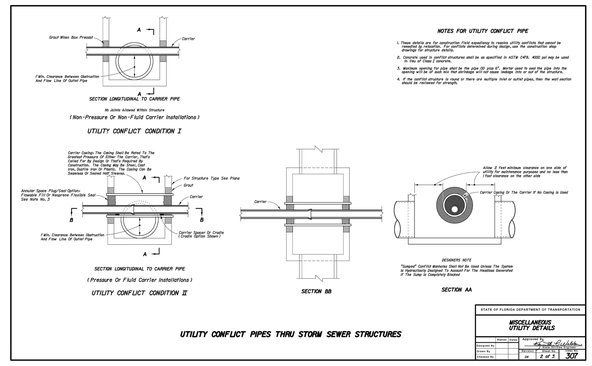

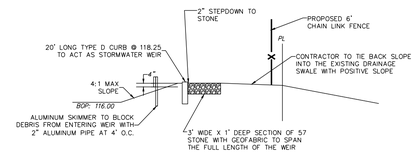

OUTFLOW DETAIL

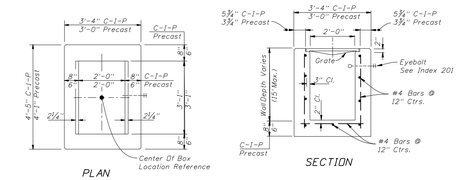

HORIZONTAL WALL REINFORCING SCHEDULES (TABLE 1)

WALL DEPTH	SCHEDULE	AREA (in.²/ft.)	MAX. SPACING BARS	MAX. SPACING WWF
0'-15'	A12	0.20	12"	8"

TYPE C
Recommended Maximum Pipe Size:
2'-0" Wall - 18" Pipe
3'-1" Wall - 24" Pipe (18" where an 18" pipe enters a 2'-0" wall)

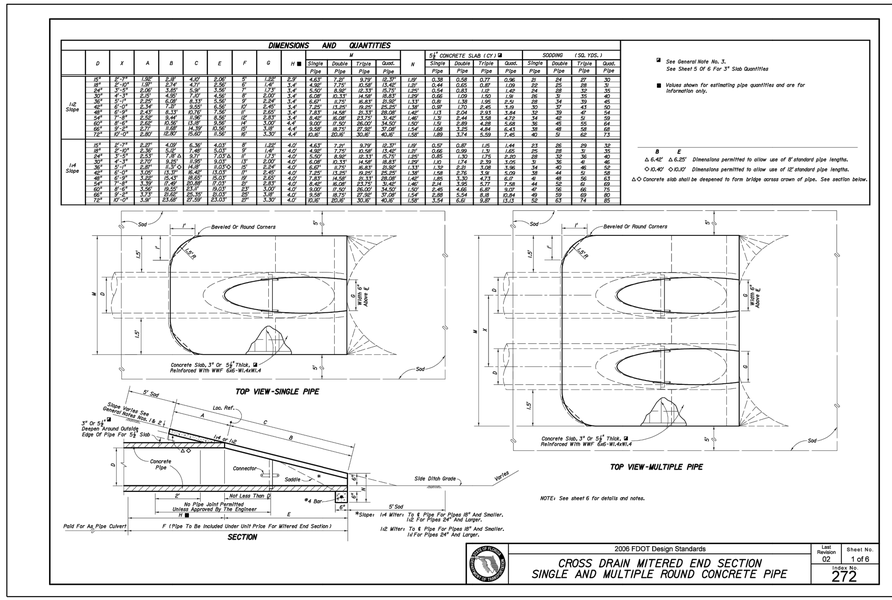

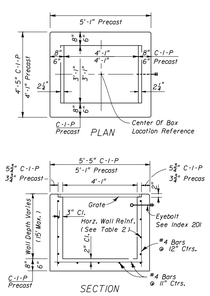

HORIZONTAL WALL REINFORCING SCHEDULES (TABLE 2)

WALL DEPTH	SCHEDULE	AREA (in.²/ft.)	MAX. SPACING BARS	MAX. SPACING WWF
0'-6'	A12	0.20	12"	8"
6'-10'	A6	0.20	6"	5"
0'-13'	A4	0.20	4"	3"
0'-15'	B5.5	0.24	5½"	5"

TYPE D
Recommended Maximum Pipe Size:
3'-1" Wall - 24" Pipe
4'-1" Wall - 36" Pipe

SECTIONS
NTS

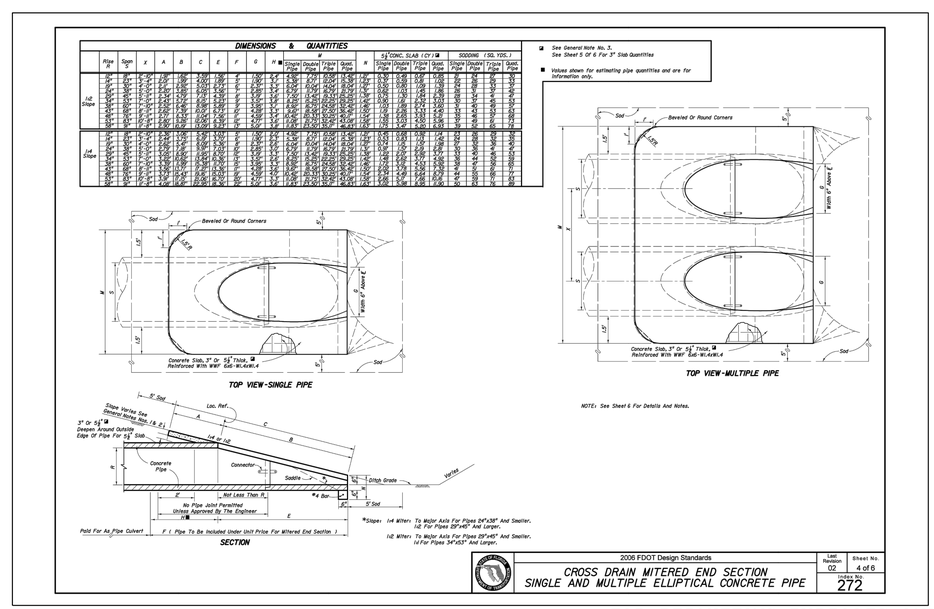

FOR PERMITTING PURPOSES ONLY

PROJECT
HOFFMAN & FACUNDO ARCHITECTS
RCMA HOPEWELL CAMPUS
1301 STRONG AVE
AVON PARK FL, 33825

THIS ITEM HAS BEEN ELECTRONICALLY SIGNED BY JAMES "MASON" COBB, PE ON 10/7/2022 USING A DIGITAL SIGNATURE
PRINTED COPIES OF THIS DOCUMENT ARE NOT CONSIDERED SIGNED AND SEALED AND THE SIGNATURE MUST BE VERIFIED ON ANY ELECTRONIC COPIES.

SEAL
Digitally signed by James M Cobb
Date: 2022.10.07 11:45:37 -04'00'
James "Mason" Cobb, P.E.
Friday, October 07, 2022

ENGINEERS
Florida License Numbers:
Carl E. Cool, P.E. -16921
James "Mason" Cobb, P.E. - 78600
Kenneth F. Wheeler P.E.- 60417
ken@coolandcobb.com
carl@coolandcobb.com
mason@coolandcobb.com

ENGINEERING FIRM
Cool and Cobb Engineering Company
203 West Main Street
Avon Park, FL 33825
(863) 657-2323 Office
(863) 657-2324 Fax

REVISIONS:
7/12/22 BW

PROJECT #22-269-2434

C-8

SHEET 9 of 12

SANITARY NOTES:

1. ALL GRAVITY PIPING TO BE P.V.C. ASTM- D-3034 SDR 35 (MIN. SCHEDULE 40).
2. CONTRACTOR IS RESPONSIBLE FOR COMPLETE "AS-BUILT" DRAWINGS.
3. ALL GRAVITY SEWER LINES SHALL BE INSPECTED UTILIZING A TELEVISION SYSTEM APPROVED BY HIGHLANDS COUNTY UTILITIES DEPARTMENT.
4. ALL CONSTRUCTION TO BE IN ACCORDANCE WITH HARDEE COUNTY UTILITIES DEPARTMENT WATER AND WASTEWATER CONSTRUCTION STANDARDS.
5. AIR RELEASE VALVES SHALL BE REQUIRED AT ALL HIGH POINTS IN THE FORCE MAINS.
6. ALL PIPE SHALL BE DYED GREEN.
7. INSTALL TRACE WIRE WITH ALL SEWER LINES PER CITY /COUNTY REQUIREMENTS.
8. ALL REUSE PIPE SHALL BE DYED PURPLE.
9. INSTALL TRACE WIRE WITH ALL WATER/REUSE LINES PER CITY /COUNTY REQUIREMENTS.
10. LEAKAGE TEST BY CONTRACTOR:
    1. THE LEAKAGE EXFILTRATION OR INFILTRATION DOES NOT EXCEED 200 GALLONS PER I INCH OF PIPE DIAMETER PER MILE PER DAY FOR ANY SECTION OF THE SYSTEM.
    2. EXFILTRATION OF INFILTRATION TEST PREFORMED WITH A MINIMUM POSITIVE HEAD OF TWO FEET.
    3. AIR TEST, AS A MINIMUM, CONFORM TO THE TEST PROCEDURE DESCRIBED IN ASTM C-828 FOR CLAY PIPE, ASTM C 924 FOR CONCRETE PIPE, ASTM F-1417 FOR PLASTIC PIPE AND FOR OTHER MATERIALS APPROPRIATE TEST PROCEDURES.
11. CONTRACTOR TO PREFORM MANHOLE INSPECTION AND TESTING FOR WATER TIGHTNESS OR DAMAGE PRIOR TO PLACING INTO SERVICE. TESTING BY USE OF AIR TO CONFORM WITH ASTM C-1244.
12. GRAVITY PIPE SHALL NOT EXCEED DEFLECTION LIMITS PER MANUFACTURER STANDARDS.

WATER NOTES:

1.) ALL WATER MAINS TO BE A.W.W.A. C-900 DR-18
2.) SEE PLAN VIEW FOR LOCATION OF EXISTING WATER MAINS.
3.) SEE CONSTRUCTION NOTES LOCATED ON THIS SHEET.
4.) ALL CONSTRUCTION SHALL BE IN ACCORDANANCE w/UTILITIES WATER & WASTEWATER CONSTRUCTION STANDARDS.
5.) THE CONTRACTOR IS RESPONSIBLE FOR ALL TESTING AS REQUIRED BY THE UTILITIES, HEALTH DEPARTMENTS AND FDEP.
6.) WHEN A WATER OR FORCE MAIN CHANGE OF DIRECTION EXCEEDS THE PIPE MANUFACTURER'S RECOMMENDATIONS FOR DEFLECTION A MITERED JOINT BEND MUST BE USED.
7.) ALL WATER SYSTEM COMPONENTS SUCH AS HYDRANTS, VALVES, ETC. SHALL MEET A.W.W.A. STANDARDS (LATEST REVISION).
    A. FIRE HYDRANTS C-502-85
    B. DUCTILE IRON WATER MAIN PIPE C-151
    C. PVC WATER PIPES 4" THROUGH 12" C-900
    D. FITTINGS 4" OR LARGER CAST OR DUCTILE IRONC-110
    E. GATE VALVES C-509
    F. BUTTERFLY VALVES C-504-87
    G. WATER MAIN DISINFECTION C-651-92
    H. WATER MAIN LEAKAGE AND PRESSURE MANUAL M23
8.) ALL TEES, PLUGS, CAPS AND BENDS SHALL HAVE RESTRAINAED JOINTS IN ACCORDANCE WITH UTILITIES STANDARD RESTRAINED JOINT SCHEDULE.
9.) WATER LINES SHALL BE TESTED IN ACCORDANCE WITH A.W.W.A. STD C-600-87, PVC PIPE A.W.W.A. MANUAL M23.
10.) DISINFECTION SHALL BE IN ACCORDANCE WITH A.W.W.A. STANDARD C-651-92.

Assumed Maximum Working Pressure
100 PSI
Testing Requirements
150 psi for 2 hour period.
Allowable Limits of Discharge
L = (N*D*√P) / 7400
L =Allowable leakage in gallons per hour
N= Approximate number of joints in the section of main test
D = Pipe diameter, inches
P = Average test pressure in gauge, psi

Thrust Restraining Length Table

Megalug Joint Restrainer	Pipe Size				
Fitting Type	4"	6"	8"	10"	12"
Tee Branch	20	45	70	90	115
90 Deg. Bend	25	35	45	50	60
45 Deg. Bend or Less	10	15	20	22	25
Dead End	55	75	95	115	135

The Chart Above describes the minimum length of pipe that shall be restrained on both sides of different types of sizes of fittings.
All Valves and fittings shall be restrained agianst thrust from 150 PSI test pressure by using flanged or "Megalug" type connectors. All Pipe joints lying within the listed minimum distance of any fitting or valve shall also be restrained. When casings fall within the minimum distance from a fitting, restrain all joints inside the casing in addition to the required minimum length of buried pipe.

LINE TABLE

BOUNDARY
BACK OF CURB
CENTERLINE
FACE OF CURB
SETBACK
RIGHT OF WAY
TOP OF BANK
TOE OF SLOPE
BOTTOM OF POND
OVERHEAD WIRES
SILT FENCE
FIRE WATER MAIN 6"
POTABLE WATER 2"
FENCE
STORM WATER
SANITARY SEWER

SCALE: 1" = 20'

UTILITY PLAN 1"=30'

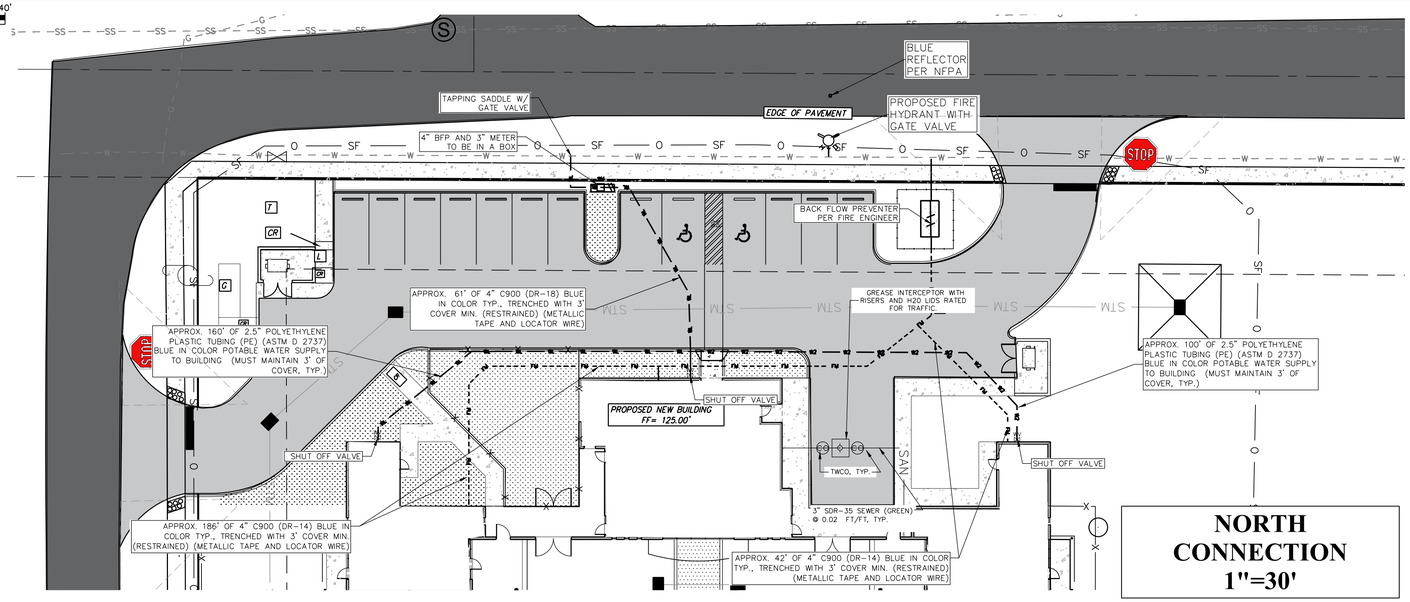

NORTH CONNECTION 1"=30'

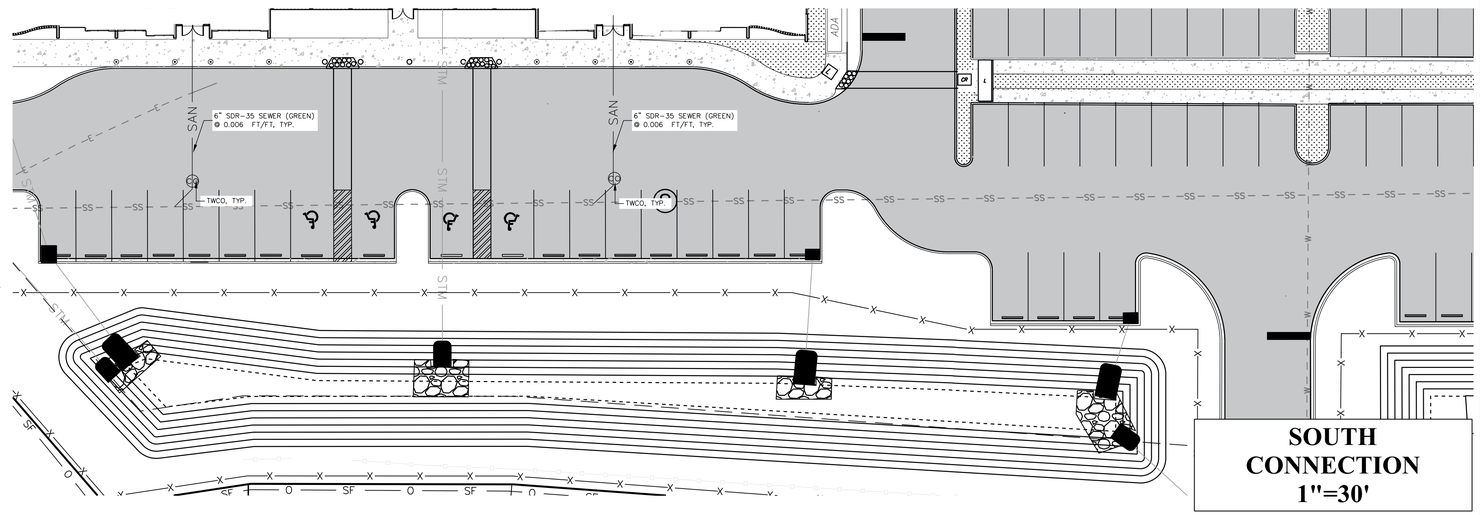

SOUTH CONNECTION 1"=30'

Utility Legend

- Sewer Manhole
- Inlet Box
- ADA Parking Stall
- Proposed Asphalt
- Proposed Concrete
- Proposed RipRap
- Proposed Landscaping
- Proposed Clean Out / Proposed Sanitary Sewer Clean Out

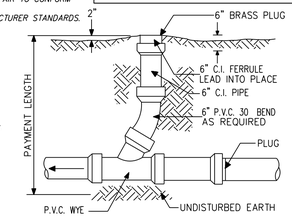

CLEANOUT DETAIL
N.T.S.

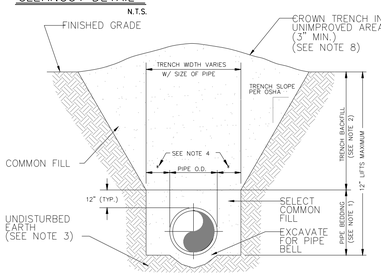

NOTES:
1. PIPE BEDDING: SELECT COMMON FILL COMPACTED TO 95% OF THE MAXIMUM DENSITY AS PER AASHTO T-180.
2. TRENCH BACKFILL: COMMON FILL COMPACTED TO 95% OF THE MAXIMUM DENSITY AS PER AASHTO T-180.
3. PIPE BEDDING UTILIZING SELECT COMMON FILL OR BEDDING ROCK IN ACCORDANCE WITH TYPE A BEDDING AND TRENCHING DETAIL MAY BE REQUIRED AS DIRECTED BY THE ENGINEER.
4. (*): 15" MAX. FOR PIPE DIAMETER LESS THAN 24", AND 24" MAX. FOR PIPE DIAMETER 24" AND LARGER.
5. WATER SHALL NOT BE PERMITTED IN THE TRENCH DURING CONSTRUCTION.
6. ALL PIPE TO BE INSTALLED WITH BELL FACING UPSTREAM TO THE DIRECTION OF THE FLOW.
7. SHEETING AND BRACING SHALL BE USED IN ACCORDANCE WITH CURRENT TRENCHING REGULATIONS AND WHERE UNSAFE CONDITIONS EXIST.
8. FINAL RESTORATION IN IMPROVED AREAS SHALL BE IN COMPLIANCE WITH ALL APPLICABLE REGULATIONS OF GOVERNING AGENCIES. SURFACE RESTORATION WITHIN LOCAL MUNICIPALITY RIGHT-OF-WAY SHALL COMPLY WITH REQUIREMENTS OF RIGHT-OF-WAY UTILIZATION REGULATIONS AND ROAD CONSTRUCTION SPECIFICATIONS.

TYPE B BEDDING AND TRENCHING DETAIL
NOT TO SCALE

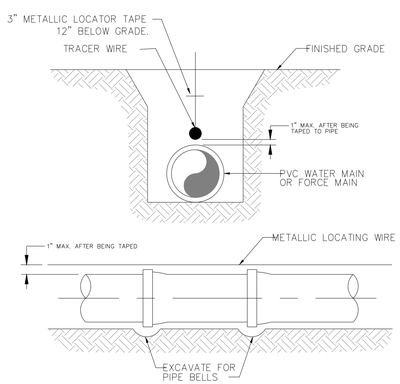

NOTES:
1. PVC PIPE SHALL REQUIRE INSULATED METALLIC LOCATING WIRE (14 GAUGE COPPER) CAPABLE OF DETECTION BY A CABLE LOCATOR.
2. AND SHALL BE BURIED DIRECTLY ABOVE THE CENTERLINE OF THE PIPE. LOCATING WIRE SHALL TERMINATE AT THE TOP OF EACH VALVE BOX.
3. AND BE CAPABLE OF EXTENDING 12" ABOVE TOP OF BOX IN SUCH A MANNER SO AS NOT TO INTERFERE WITH VALVE OPERATION. USE DUCT TAPE AS NECESSARY TO HOLD WIRE DIRECTLY ON THE TOP OF THE PIPE.

PVC PIPE LOCATING WIRE DETAIL
NOT TO SCALE

LOCATION OF PUBLIC WATER SYSYEM MAINS IN ACCORDANCE WITH F.A.C. RULE 62-555.314

Other Pipe	Horizontal Separation	Crossings (1)	Joint Spacing @ Crossings (Full Joint Centered)
Storm Sewer, Stormwater Force Main, Reclaimed Water (2)	Water Main 3 ft. minimum	Water Main 12 inches is the minimum, except for storm sewer, then 6 inches is the minimum and 12 inches is preferred	Alternate 3 ft. minimum Water Main
Vacuum Sanitary Sewer	Water Main 10 ft. preferred 3 ft. minimum	Water Main 12 inches preferred 6 inches minimum	Alternate 3 ft. minimum Water Main
Gravity or Pressure Sanitary Sewer, Sanitary Sewer Force Main, Reclaimed Water (4)	Water Main 10 ft. preferred 6 ft. minimum (3)	Water Main 12 inches is the minimum, except for gravity sewer, then 6 inches is the minimum and 12 inches is preferred	Alternate 6 ft. minimum Water Main
On-Site Sewage Treatment & Disposal System	10 ft. minimum	---	---

(1) Water main should cross above other pipe. When water main must be below other pipe, the minimum separation is 12 inches.
(2) Reclaimed water regulated under Part III of Chapter 62-610, F.A.C.
(3) 3 ft. for gravity sanitary sewer where the bottom of the water main is laid at least 6 inches above the top of the gravity sanitary sewer.
(4) Reclaimed water not regulated under Part III of Chapter 62-610, F.A.C.

Disclaimer – This document is provided for your convenience only. Please refer to F.A.C. Rule 62-555.314 for additional construction requirements.

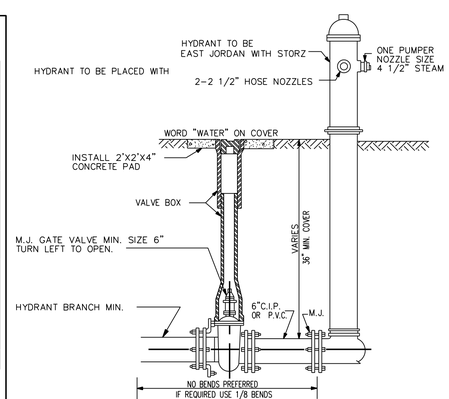

HYDRANT DETAIL
N.T.S.

NOTES:
1. LOCATE SINGLE LATERAL AS CLOSE TO LOT LINE AS POSSIBLE.
2. SERVICE LATERALS SHALL BE 6" MINIMUM DIAMETER FOR SINGLE SERVICE.
3. BENDS SHALL BE 45° MAXIMUM.
4. RECONNECT EXISTING SERVICES.
5. LENGTH OF SERVICE LATERALS SHALL BE 150' OR LESS.
6. ALL MAINS, FITTINGS, AND APPURTENANCES, SHALL BE SDR 26

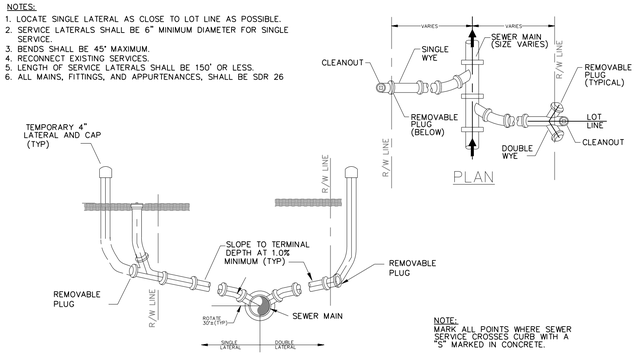

NOTE:
MARK ALL POINTS WHERE SEWER SERVICE CROSSES CURB WITH A "S" MARKED IN CONCRETE.

SEWER SERVICE RISER CONNECTION DETAILS
NOT TO SCALE

FOR PERMITTING PURPOSES ONLY

PROJECT
HOFFMAN & FACUNDO ARCHITECTS
RCMA HOPEWELL CAMPUS
1301 STRONG AVE
AVON PARK FL, 33825

THIS ITEM HAS BEEN ELECTRONICALLY SIGNED BY JAMES M. COBB, PE ON 10/07/2022 USING A DIGITAL SIGNATURE

PRINTED COPIES OF THIS DOCUMENT ARE NOT CONSIDERED SIGNED AND SEALED AND THE SIGNATURE MUST BE VERIFIED ON ANY ELECTRONIC COPIES.

SEAL
Digitally signed by James M Cobb
Date: 2022.10.07 11:46:44 -04'00'
James "Mason" Cobb, P.E.
Friday, October 07, 2022

ENGINEERS
Florida License Numbers:
Carl E. Cool, P.E. - 16921
James "Mason" Cobb, P.E. - 78600
Kenneth F. Wheeler P.E.- 60417
ken@coolandcobb.com
carl@coolandcobb.com
mason@coolandcobb.com

ENGINEERING FIRM
Cool and Cobb Engineering Company
203 West Main Street
Avon Park, Fl. 33825
(863) 657-2323 Office
(863) 657-2324 Fax

REVISIONS:
7/12/22 BW

PROJECT #22-269-2434

C-9

SHEET 10 of 12

S:\Project Files\2022 Projects\22-269-2434- RCMA Hopewell Campus\Drawings\Civil\22-269-1122-Civil_site_plans_for_dis_site_plans.dwg UTILITY Oct 07, 2022 8:25am by User

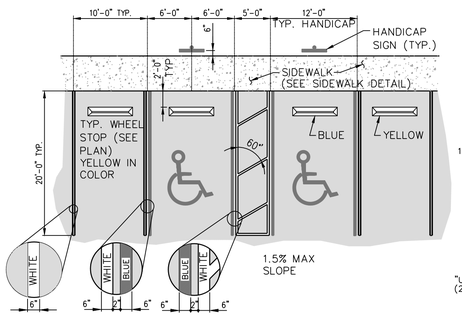

TYP. PARKING SPACE DETAIL

N.T.S.

FTO-25
NOTES:
1. ALL LETTERS ARE 1" SERIES "C" FLECTORIZED LEGEND & BORDER BORDER.

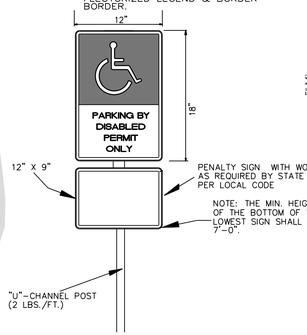

HANDICAP SIGN DETAIL

N.T.S.

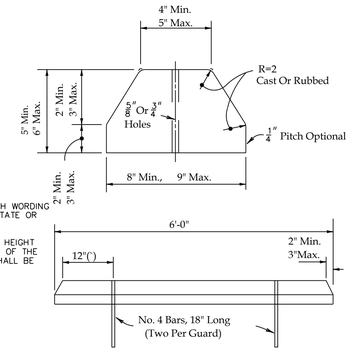

CONCRETE WHEEL STOP

N.T.S.

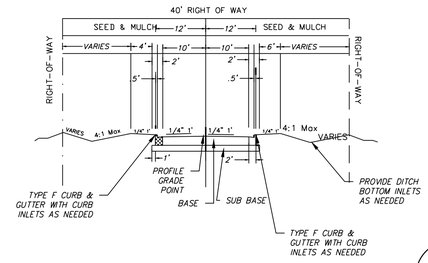

TYPICAL SECTION

NTS

2-LANE LOCAL ROAD WITH CURB & GUTTER

STRUCTRAL COURSE	2" SUPERPAVE ASPHALTIC CONCRETE TYPE SP-12.5.
BASE COURSE	8" LIMEROCK OR SHELLROCK COMPACTED TO 95% DENISTY AS PER AASHTO T-180
STABILIZATION SUBBASE & SHOULDERS	12" THICK OF STABILATION COMPACTED TO A MINIMUM DENSITY OF 95% AS PER. AASHTO T-180

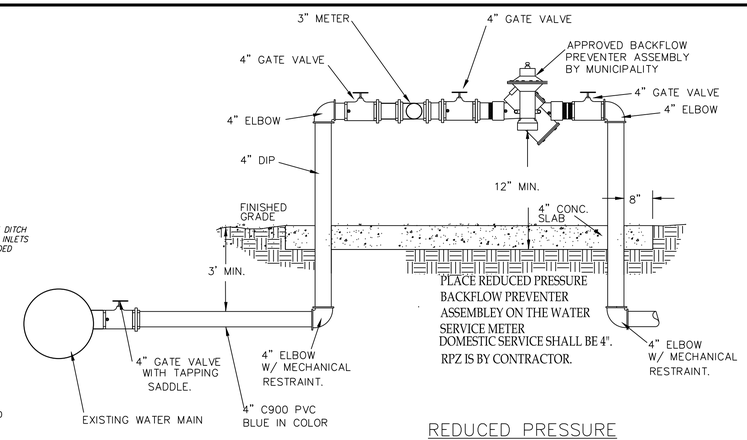

REDUCED PRESSURE BACKFLOW PREVENTER

NOT TO SCALE

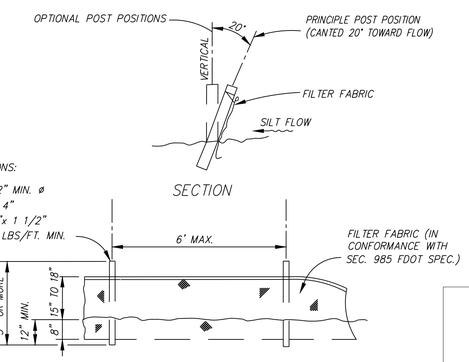

ELEVATION

NOTE: SILT FENCE TO BE PAID FOR UNDER THE CONTRACT UNIT PRICE FOR STAKED SILT FENCE (LF).

SILT SCREEN DETAIL

N.T.S.

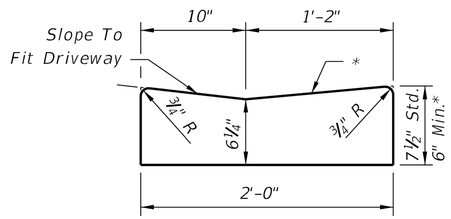

Note: To be paid for as parent curb.

DROP CURB

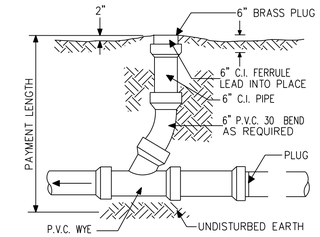

CLEANOUT DETAIL

N.T.S.

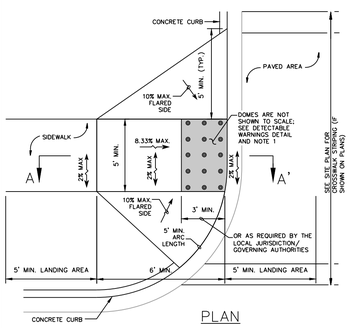

PLAN

SEE FDOT INDEX 304

NOTES:

1. THE SURFACE OF RAMP SHALL HAVE DETECTABLE WARNINGS AS SHOWN. DETECTABLE WARNINGS SHALL CONSIST OF RAISED TRUNCATED DOMES. SEE DETECTABLE WARNINGS DETAIL.
2. RAMP SIDE SLOPE VARIES UNIFORMLY FROM A MAXIMUM OF UP TO 10% AT CURB TO CONFORM WITH LONGITUDINAL SIDEWALK SLOPE ADJACENT TO TOP OF THE RAMP.
3. CONSTRUCT PER A.D.A. STANDARDS.
4. REFER TO PLANS FOR ADJACENT SLOPES.
5. THE CROSS SLOPE OF THE RAMP SURFACE SHALL BE NO GREATER THAN 1:50.

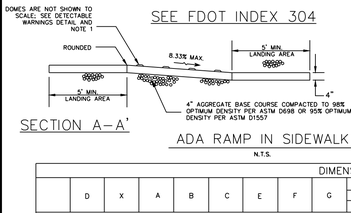

SECTION A–A'

ADA RAMP IN SIDEWALK

N.T.S.

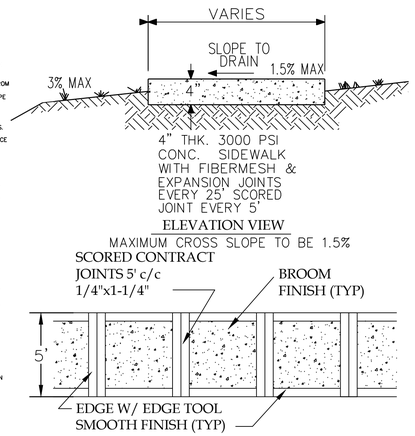

SIDEWALK DETAIL

N.T.S.

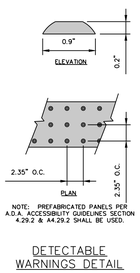

NOTE: PREFABRICATED PANELS PER A.D.A. ACCESSIBILITY GUIDELINES SECTION 4.29.2 & 4.29.2 SHALL BE USED.

DETECTABLE WARNINGS DETAIL

GENERAL NOTES

1. Mitered end sections for pipe sizes 15", 18" and 24" round or equivalent pipe arch or elliptical pipe are permitted within the clear zone. When the slope intersection permits, the mitered end section may be located with the culvert opening as close as 8' beyond the outside edge of the shoulder.
2. Slope and ditch transitions shall be used when the normal roadway slope must be flattened to place end section outside clear zone.
3. The reinforced concrete slab shall be constructed for all sizes of cross drain pipe and cast in place with Class I concrete. Slabs shall be 5/2" thick unless 3" thickness called for in plans.
4. Concrete pipe used in the assembly of mitered end sections shall be selective lengths to avoid excessive connections.
5. Corrugated metal pipe galvanizing that is damaged during beveling and perforating for mitered end section shall be repaired.
6. That portion of corrugated metal pipe in direct contact with the concrete slab shall be bituminous coated prior to placing of the concrete.
7. Unless otherwise designated in the plans, concrete pipe mitered end sections may be used with any type of cross drain pipe; corrugated steel pipe mitered end sections may be used with any type of cross drain pipe except aluminum pipe; and, corrugated aluminum mitered end sections may be used with any type of cross drain pipe except steel pipe. When bituminous coated metal pipe is specified for cross drain pipe, mitered end sections shall be constructed with like pipe or concrete pipe.
8. When the mitered end section pipe is dissimilar to the cross drain pipe, a concrete jacket shall be constructed in accordance with Standard Index 280.
9. When existing multiple cross drain pipes are spaced other than the dimensions shown in this detail, or have non-parallel axes, or have non-uniform sections, the mitered end sections will be constructed either separately as single pipe mitered end sections or collectively as multiple pipe end sections as directed by the Engineer; however, mitered end sections will be paid for each based on each independent pipe end.
10. The cost of all pipe(s), fasteners, reinforcing, connectors, anchors, concrete, sealants, jackets, and coupling bands shall be included in the cost for the mitered end section. Sodding shall be paid for separately under the contract unit price of Sodding, SY.
11. Mitered end sections shall be paid for under the contract unit price for Mitered End Section (CD). Each, based on each independent pipe end. Mitered end sections use for detention/retention basin outlets are to be paid for under the contract unit price for Mitered End Section, Each.

B	E	
Δ 6.42'	Δ 6.25	Dimensions permitted to allow use of 8' standard pipe lengths.
◇ 10.40	◇10.10'	Dimensions permitted to allow use of 12' standard pipe lengths.
Δ◇		Concrete slab shall be deepened to form bridge across crown of pipe. See section below.
◪		See General Note No. 3. See Sheet 5 Of 6 For 3" Slab Quantities

DIMENSIONS AND QUANTITIES

	D	X	A	B	C	E	F	G	M Single Pipe	M Double Pipe	M Triple Pipe	M Quad. Pipe	N	5/2" CONCRETE SLAB (CY) ◪ Single Pipe	Double Pipe	Triple Pipe	Quad. Pipe	SODDING (SQ. YDS.) Single Pipe	Double Pipe	Triple Pipe	Quad. Pipe
2:1 Slope	15"	2'-7"	1.92'	2.18'	4.10'	2.06'	5"	1.22'	4.63'	7.21'	9.79'	12.37'	1.19'	0.38	0.58	0.77	0.96	21	24	27	30
	18"	2'-10"	1.97'	2.74'	4.71'	2.56'	6'	1.41'	4.92'	7.75'	10.58'	13.42'	1.21'	0.44	0.65	0.87	1.09	22	25	28	31
	24"	3'-3"	2.08'	3.85'	5.91'	3.56'	9'	1.73'	5.50'	8.92'	12.33'	15.75'	1.25'	0.54	0.83	1.12	1.42	24	28	32	35
	30"	4'-3"	2.15'	4.95'	7.10'	4.56'	8'	2.00'	6.08'	10.33'	14.58'	18.83'	1.29'	0.66	1.09	1.50	1.91	26	31	35	40
	36"	5'-1"	2.25'	6.08'	8.33'	5.56'	9'	2.24'	6.67'	11.75'	16.83'	21.92'	1.33'	0.81	1.38	1.95	2.51	28	34	39	45
	42"	6'-0"	2.34'	7.21'	9.55'	6.56'	10'	2.45'	7.25'	13.25'	19.25'	25.25'	1.38'	0.97	1.70	2.45	3.19	30	37	43	50
	48"	6'-9"	2.43'	8.33'	10.78'	7.56'	11'	2.65'	7.83'	14.58'	21.33'	28.08'	1.42'	1.13	2.04	2.93	3.84	32	39	47	54
	54"	7'-8"	2.52'	9.44'	11.98'	8.56'	12'	2.83'	8.42'	16.08'	23.75'	31.42'	1.46'	1.31	2.44	3.58	4.72	34	42	51	59
	60"	8'-6"	2.62'	10.56'	13.18'	9.56'	14'	3.00'	9.00'	17.50'	26.00'	34.50'	1.50'	1.51	2.89	4.28	5.68	36	45	55	64
	66"	9'-2"	2.71'	11.68'	14.39'	10.56'	15'	3.18'	9.58'	18.75'	27.92'	37.08'	1.54'	1.68	3.25	4.84	6.43	38	48	58	68
	72"	10'-0"	2.80'	12.80'	15.60'	11.56'	16'	3.30'	10.16'	20.16'	30.16'	40.16'	1.58'	1.89	3.74	5.59	7.45	40	51	62	73
4:1 Slope	15"	2'-7"	2.27'	4.09'	6.36'	4.03'	8'	1.22'	4.63'	7.21'	9.79'	12.37'	1.19'	0.57	0.87	1.15	1.44	23	26	29	32
	18"	2'-10"	2.36'	5.17'	7.48'	5.03'	9'	1.41'	4.92'	7.75'	10.58'	13.42'	1.21'	0.66	0.98	1.31	1.63	25	28	31	35
	24"	3'-3"	2.53'	7.18'	9.71'	7.03'	11'	1.73'	5.50'	8.92'	12.33'	15.75'	1.25'	0.85	1.30	1.75	2.20	28	32	36	40
	30"	4'-3"	2.70'	9.22'	11.98'	9.03'	13'	2.00'	6.08'	10.33'	14.58'	18.83'	1.29'	1.10	1.74	2.39	3.05	31	36	41	46
	36"	5'-1"	2.87'	11.30'	14.18'	11.03'	15'	2.24'	6.67'	11.75'	16.83'	21.92'	1.33'	1.32	2.21	3.08	3.96	34	40	46	52
	42"	6'-0"	3.05'	13.37'	16.42'	13.03'	17'	2.45'	7.25'	13.25'	19.25'	25.25'	1.38'	1.58	2.76	3.91	5.09	38	44	51	58
	48"	6'-9"	3.22'	15.43'	18.65'	15.03'	19'	2.65'	7.83'	14.58'	21.33'	28.08'	1.42'	1.85	3.30	4.73	6.17	41	48	56	63
	54"	7'-8"	3.39'	17.49'	20.88'	17.03'	21'	2.83'	8.42'	16.08'	23.75'	31.42'	1.46'	2.14	3.95	5.77	7.58	44	52	61	69
	60"	8'-6"	3.56'	19.55'	23.11'	19.03'	23'	3.00'	9.00'	17.50'	26.00'	34.50'	1.50'	2.45	4.66	6.87	9.07	47	56	66	75
	66"	9'-2"	3.73'	21.62'	25.35'	21.03'	25'	3.18'	9.58'	18.75'	27.92'	37.08'	1.54'	2.88	5.54	8.18	10.84	49	59	69	80
	72"	10'-0"	3.91'	22.68'	26.59'	23.03'	27'	3.30'	10.16'	20.16'	30.16'	40.16'	1.58'	3.54	6.61	9.87	13.13	52	63	74	85

*Slope: 4:1 Miter: To | Pipe For Pipes 18" And Smaller.
2:1 For Pipes 24" And Larger.

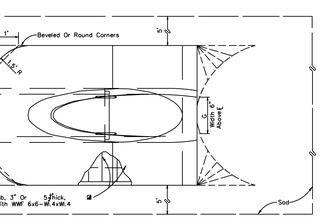

TOP VIEW–SINGLE PIPE

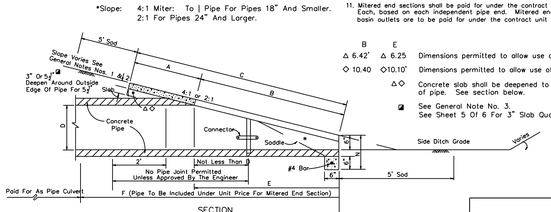

SECTION

CROSS DRAIN MITERED END SECTION

SINGLE AND MULTIPLE ROUND CONCRETE PIPE

INDEX NO. 272

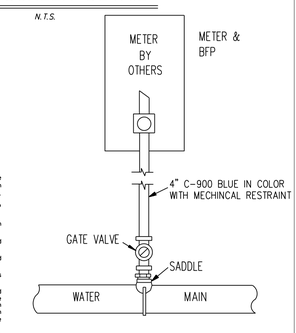

SINGLE WATER SERVICE DETAIL

NTS

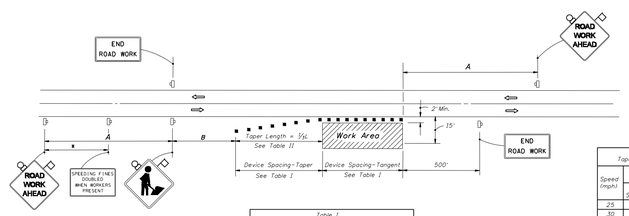

DISTANCE BETWEEN SIGNS		
Speed	Spacing (ft.) A	B
40 mph or less	200	200
45 mph	350	350
50 mph or greater	500	500

500' beyond the ROAD WORK AHEAD sign or midway between signs whichever is less.

Table I
Device Spacing

Speed (mph)	Max. Distance Between Devices (ft.) Cones or Tubular Markers Taper	Tangent	Type I or Type II Barricades or Vertical Panels or Drums Taper	Tangent
25	25	50	25	50
30 to 45	25	50	30	50
50 to 70	25	50	50	100

Table II
Taper Length = Shoulder

Speed (mph)	5/5L (ft) 8' Shdr.	10' Shdr.	12' Shdr.	Notes
25	28	35	42	
30	40	50	60	$L=\frac{WS^2}{60}$
35	55	68	82	
40	72	90	107	
45	120	150	180	
50	133	167	200	
55	147	183	220	
60	160	200	240	L=WS
65	173	217	260	
70	187	233	280	

8' minimum shoulder width

5/5L = Length of shoulder taper in feet

W= Width of total shoulder in feet (combined paved and unpaved width)

S= Posted speed limit (mph)

SYMBOLS

- Work Area
- Sign With 18" x 18" (Min.) Orange Flag And Type B Light
- Channelizing Device (See Index No. 600)
- Work Zone Sign
- Lane Identification + Direction of Traffic

GENERAL NOTES

1. When four or more work vehicles enter the through traffic lanes in a one hour period or less (excluding establishing and terminating the work area), the advanced FLAGGER sign shall be substituted for the WORKERS sign. For location of flaggers and FLAGGER signs, see Index No. 603.
2. WORKERS sign to be removed or fully covered when no work is being performed.
3. SHOULDER WORK sign may be used as an alternate to the WORKER symbol sign only on the side where the shoulder work is being performed.
4. When a side road intersects the highway within the TTC zone, additional TTC devices shall be placed in accordance with other applicable TCZ Indexes.
5. For general TCZ requirements and additional information, refer to Index No. 600.

DURATION NOTES

1. Signs and channelizing devices may be omitted if all of the following conditions are met:
   a) Work operations are 60 minutes or less.
   b) Vehicles in the work area have high-intensity, rotating, flashing, oscillating, or strobe lights operating.

CONDITIONS

WHERE ANY VEHICLE, EQUIPMENT, WORKERS OR THEIR ACTIVITIES ENCROACH THE AREA CLOSER THAN 12' BUT NOT CLOSER THAN 2' TO THE EDGE OF TRAVEL WAY.

TWO-LANE TWO-WAY, WORK ON SHOULDER

LIC. Report	Sheet No.
07/01/07	1 of 1
Index No. 602	

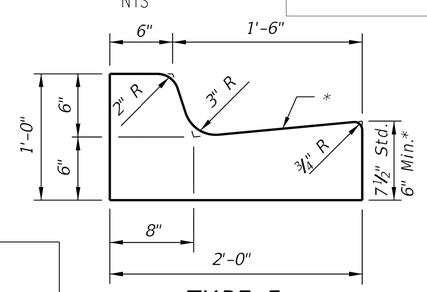

TYPE F

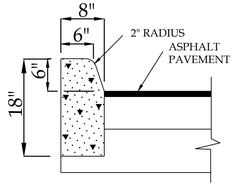

D.O.T. TYPE "D" CONC. CURB

N.T.S.

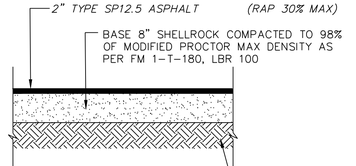

ASPHALT PAVING

N.T.S.

FOR PERMITTING PURPOSES ONLY

DETAILS

PROJECT

HOFFMAN & FACUNDO ARCHITECTS

RCMA HOPEWELL CAMPUS
1301 STRONG AVE
AVON PARK FL, 33825

THIS ITEM HAS BEEN ELECTRONICALLY SIGNED BY JAMES "MASON" COBB, PE ON 10/7/2022 USING A DIGITAL SIGNATURE

PRINTED COPIES OF THIS DOCUMENT ARE NOT CONSIDERED SIGNED AND SEALED AND THE SIGNATURE MUST BE VERIFIED ON ANY ELECTRONIC COPIES.

SEAL

Digitally signed by James M Cobb
Date: 2022.10.07 11:48:02 -04'00'

James "Mason" Cobb, P.E.
Friday, October 07, 2022

ENGINEERS

Florida License Numbers:
Carl E. Cool, P.E. -16921
James "Mason" Cobb, P.E. - 78600
Kenneth F. Wheeler P.E.- 60417
ken@coolandcobb.com
carl@coolandcobb.com
mason@coolandcobb.com

ENGINEERING FIRM

Cool and Cobb Engineering Company
203 West Main Street
Avon Park, FL 33825
(863) 657-2323 Office
(863) 657-2324 Fax

REVISIONS:

7/12/22	BW

PROJECT #22-269-2434

C-10

SHEET 11 of 12

S:\Project Files\2022 Projects\2022 Awarded Projects\22-269-2434- RCMA Hopewell Campus\Drawings\Con\22-269-1022-Cons_Lvl_Plns_and_Dtl_Rev_Rc_Ph_1_Site_Plans.dwg Details Oct 07, 2022 9:40am by: User

TECHNICAL SPECIFICATIONS

Sec. 02.200 General: The Specifications and Drawings are an integrated part of the Contract Documents and as such will not stand alone if used independently as individual parts, paragraphs, or drawing sheets. The Drawings and Specifications establish minimum standards of quality for a project. They do not purport to cover all details entering into its design and construction or of all material and equipment required to complete the work.

Sec. 02.201. Maintenance of Traffic:

A. Control Devices: The Contractor shall be required to keep the entire work site in full compliance with the Florida Department of Transportation Roadway and Traffic Design Standards, current edition and the USDOT, FHWA Manual on Uniform Traffic Control Devices, current edition.

B. Detours: Detours shall be require approval by the County Engineer. Any detours approved as a part of the traffic circulation plan, shall be required to be properly posted and a minimum of 48-hours advance notice shall be given to the County Engineer's Office, Law Enforcement agencies, Fire Department, School Board and Emergency Services. Advance notice shall also be placed at the last intersection before the detour.

C. Driveways Kept Open: No business will have vehicular access totally blocked at any time. Driveway access to property will not be blocked for more than 8 hours on any day Property owners will be notified in written form by the Contractor 24 hours prior to the blocking of any driveway, business, or property access. Blocking of driveways will require advance approval by the County Engineer.

D. Maintenance of Traffic Violations: The County will report any known violation of the required maintenance of traffic to the Owner, Project Engineer, or Contractor. The Contractor will have 4 hours of regularly scheduled work time to bring the site into full compliance. If this is not done, the County will have the option to take any corrective measures it feels necessary and to bill the Owner for the cost of these measures.

E. Traffic Control Plan Approval: Prior to the commencement of work at the job site, the Project Engineer shall receive approval of his traffic control plan from the County Engineer Access for local traffic shall be maintained throughout the construction period of the project.

Sec. 02.202. Driveway Ingress and Egress Maintenance: The specification shall only apply where residences,businesses, and other types of property front on the road to be constructed or reconstructed, and driveway connections are to be disturbed.

A. Contractor will be required to place commercial base material in driveways and/or access points affected by the project, where considered necessary by the Project Engineer to provide safe, stable and reasonable access to residence, businesses, and property.

B. The materials to be used for the driveway maintenance shall be lime rock, stone or oyster shell. The grade and quality of the material shall be that offered for commercial supply in the area. Commercial materials used in locations which have inadequate drainage or are prone to be wet, shall be of a stable character, unaffected by wet conditions.

C. The material shall be placed in the driveway as directed by the Project Engineer. The material shall be leveled, manipulated, compacted, to the extent appropriate we for the intended use of the particular driveway.

D. As permanent driveway construction is accomplished at a particular location, previously placed commercial materials which are suitable for reuse may be salvaged and reused on other driveways as directed.

Sec. 02.203. Clearing and Grubbing:

A. Clearing and Grubbing shall consist of the complete removal and disposal of all timber, brush, vegetation, stumps,roots, boulders, pavement, rubbish and debris and all other materials and obstructions resting on or protruding through the surface of the existing ground and the surface of work areas. Material resulting from clearing and grubbing shall be disposed of by the Contractor in a proper place.

B. As an exception to the above provisions, where so directed by the Project Engineer and approved by the County Engineer, desirable trees within the roadway shall be trimmed, protected and left standing. Branches of trees extending over the area occupied by the roadway shall be trimmed as directed, to give a clear height of 16 feet above the roadway.

C. Within the right-of-way and within all swales and ditches, all stumps, roots, ect., protruding through or appearing on the surface of the completed excavation shall be removed or cut off below the finished excavation surface. Within all other areas where Clearing and Grubbing is to be done, roots and other debris, projecting through or appearing on the surface of the original ground, shall be removed to a depth of one foot below the bottom of the subgrade.

D. Burning of such materials will only be allowed when proper burn permit can be obtained and all such burning shall be subject to applicable laws, ordinances and regulations and shall be done at locations where trees and shrubs adjacent to the cleared area will not be harmed. Burning may be required to cease immediately if complaints are received by the Project Engineer or the City Engineer.

Sec. 02.204. Earthwork: All materials shall be in accordance with the Florida Department of Transportation Standard Specifications for Road and Bridge Construction, current edition, and all activities performed in accordance with the State of Florida Department of Transportation Design Standards for Design, Construction, Maintenance and Utility Operations on the State Highway System, current edition.

Sec. 02.205. Rigid Ditch Checks: All materials shall be in accordance with the Florida Department of Transportation Standard Specifications for Road and Bridge Construction, current edition, and constructed in accordance with the State of Florida Department of transportation Design Standards for Design, Construction, Maintenance and Utility Operations on the State Highway System, current edition.

Sec. 02.206. Riprap (Sand-Cement): All materials shall be in accordance with the Florida Department of transportation Standard Specifications for Road and Bridge Construction, current edition, and constructed in accordance with the State of Florida Department of Transportation Design Standards for Design, Construction, Maintenance and Utility Operations on the State Highway System, current edition.

Sec. 02.207. Inspections, Field Measurements and Laboratory Tests:

A. General: The Contractor shall notify the Project Engineer in advance of the time and date when any tests can be conducted, so that the Project Engineer may schedule the required testing with the independent testing laboratory. The test samples shall be taken by either an employee of the independent testing laboratory or the Project Engineer or his representative. In no case shall the Contractor take the samples or transport the samples to the laboratory. The Project Engineer shall inspect all construction and is authorized to call to the attention of the Contractor any failure of work or materials to conform with the plans and specifications. The following laboratory tests or field measurements and frequency of such shall be made in accordance with the Project Engineer's direction by the independent testing laboratory, at the Project expense, and in keeping with good engineering practices.

The Contractor is required to conduct and/or stop his work so that the appropriate tests, samples and measurements can be made in a safe manner.The Contractor shall receive copies of the test reports from the Project Engineer. The independent testing laboratory shall mail or hand deliver copies of all tests directly to the office of the County Engineer.

B. Sub-Based and Shoulder: Sub-base and shoulder tests shall be made as follows:

1. Proctor: one per mile unless the native soils are significantly different. In that case, one per every major soils type. Sample shall be taken from the roadway after scarifying and mixing.
2. Width: every 200 feet after sub-base and shoulders have been mixed, and compacted and prior to any "boxing out"operation.
3. Depth:
   a. Sub-base: every 200 feet within the area to be covered by the base material after final grading and compaction; just prior to the placement of the base material. Tests will be conducted in a zig-zag pattern covering the entire area described above.
   b. Shoulder: every 400 feet, each side, within the shoulder areas prior to any "boxing out" operation, but after mixing and compaction.
1. Florida Bearing Value (FBV): At 200 foot, intervals take three samples. Samples shall be taken from one foot in from each outside edge of the shoulder and one from within the traffic lane (areas). Combine the top 1/2 of three consecutive samples into one composite sample and combine the bottom 1/2 of the same three samples into another single composite sample. Minimum acceptable FBV is 60 psi. (No tolerance acceptable)
2. Density:
   a. Sub-base: every 200 feet, in a zig-zag pattern, and just prior to the placement of the base. Every other test will be made at the proposed edge of the pavement. Minimum acceptable value: 95% density as per AASHTO T-180.
   b. Shoulder: every 400 feet, one to two feet in from the outside edge of the shoulder, on each side of the road. Density samples shall be taken just prior to the "boxing out" operation for the base. Minimum acceptable value: 95% density as per AASHTO T-180.
3. Failures: Any failure revealed by the required field measurements and laboratory tests requiring additional material shall require the Contractor to scarify the existing material, place the additional material and then reshape and re-compact the sub-base for a minimum distance of 50 feet each side of the failure. Deficient density will require additional compaction a minimum of 50 feet each side of the failure.
4. Placement of the base: The base shall be placed on the sub-base only after copies of the results of the required field measurements and laboratory tsts for the sub-base have been received and approved by the Project Engineer.

C. Base (Lime rock or Shell rock): Tests for the base shall be made as follows:

1. Material: For material whose source is an FDOT approved and certified mining pit, submittal of copies of the pit certification shall be required; for material from any other source, submittal of test results from an approved testing laboratory in accordance with a Base Material Testing Plan, approved in advance by the County Engineer, shall be required.
2. Proctor: one per mile unless the base material changes in quality; sample must be taken from an on-site stockpile.
3. Width, Depth, Crown: every 200 feet as shown on plans. See typical sections in Section Six: Illustrations for minimum requirements.
4. Density: every 200 feet in a zig-zag pattern within the areas to be covered by pavement. Minimum acceptable value: 95% density as per AASHTO T-180.
5. Base Failures: Any failures of the base revealed by the required field measurement and laboratory tests requiring additional base material shall require the Contractor to scarify the existing base material, place the additional material and then re-shape and re-compact the base for a minimum distance of 50 feet each side of the failure. Deficient density of the base will require additional compaction a minimum of 50 feet each side of failure.
6. Base Priming: Once the base is approved by the testing laboratory, the Contractor shall as soon as possible prime and sand-seal the base. Approval Engineer receives the results of the field measurements and laboratory tests directly from the independent testing laboratory.

D. Shoulder: The finished shoulder area is intended to be compacted to a smooth, firm condition that can accommodate vehicles without ruts being created. If in the opinion of the Project Engineer, excess unsuitable material has been incorporated into the top 6 inches of the shoulder, he may require that stabilizing material be added and mixed to produce a FBV of 60 psi, and be compacted to a minimum density of 95% as per AASHTO T-180.

E. Trenches for Underground Pipes or Structures: The following tests shall be made:

1. Proctor: one per mile of trench unless the material changes; if material changes one per each different soil material allowed for backfill.
2. Density: every 200 feet outside areas of vehicular traffic and every 10 feet where the trench crosses an area of vehicular travel, including driveways. Frequency of testing will be the same for each lift. Each compacted one foot depth of backfill is a lift. Testing of density will start when backfill is 12 inches over the top of the pipe. Tests will be done within the width of the trench as indicated by the Project Engineer.
3. Density Requirements: The density requirements are that:
   a. In areas of proposed or existing pavement or vehicular traffic all backfill, sub-base, and base material shall be compacted to 98% of maximum density as per AASHTO T-180; and
   b. In other areas not under proposed or existing paving or in areas not subject to vehicular traffic, the backfill shall be compacted to 90% density as per AASHTO T-180.

Sec. 02.208 Tolerances: The required thickness and widths shall be the absolute minimum allowable. No allowance shall be made for failure in a width or depth dimension. Florida Bearing Value and density requirements shown on the plans and specifications are the absolute minimum allowable and no values less than those specified will be accepted. Grades on roadway centerline and ditch inverts shall be plus or minus 0.05 of a foot from plan dimensions.

Sec. 02.209. Stabilized sub base and Shoulders: All materials shall be in accordance with the Florida Department of Transportation Standard Specifications for Road and Bridge Construction, current edition, and constructed in accordance with the State of Florida Department of Transportation Design Standards for Design, Construction, Maintenance and Utility Operations on the State Highway System, current edition.

Sec 02.210 Lime rock or Shell rock Base: All materials shall be in accordance with the Florida Department of Transportation Standard Specifications for Road and Bridge Construction, current edition, and constructed in accordance with the State of Florida Department of Transportation Design Standards for Design, Construction, Maintenance and Utility Operations on the State Highway System, current edition.

Sec. 02.211. Asphalt: All materials shall be in accordance with the Florida Department of Transportation Standard Specifications for Road and Bridge Construction, current edition, type S asphalt concrete shall be in accordance with the Florida Department of, Transportation Standard Specifications for Road and Bridge Construction, 2000 edition,and constructed in accordance with the State of Florida Department of Transportation Design Standards for Design,Construction, Maintenance and Utility Operations on the State Highway System, current edition.

Sec. 02.212. Pavement Marking: All materials shall be in accordance with the Florida Department of Transportation Standard Specifications for Road and Bridge Construction, current edition, and constructed in accordance with the State of Florida Department of Transportation Design Standards for Design, Construction, Maintenance and Utility Operations on the State Highway System, current edition.

Sec. 02.213. Signs: All materials and installation methods shall be in accordance with the Florida Department of Transportation Standard Specifications for Road and Bridge Construction, current edition, USDOT, FHWA Manual on Uniform Traffic Control Devices, current edition, and State of Florida Department of Transportation Design Standards for Design, Construction, Maintenance and Utility Operations on the State Highway System, current edition.

Sec. 02.214. Culverts/Storm Sewers: All materials shall be in accordance with the Florida Department of Transportation Standard Specifications for Road and Bridge Construction, current edition, and constructed in accordance with the State of Florida Department of Transportation Design Standards for Design, Construction, Maintenance and Utility Operations on the State Highway System, current edition.

Sec. 02.215. Grassing: All materials and installation procedures shall be in accordance with the Florida Department of Transportation Standard Specifications for Road and Bridge Construction, current edition, and the State of Florida Department of Transportation Design Standards for Design, Construction, Maintenance and Utility Operations on the State Highway System, current edition. The areas on which the sod is to be placed shall contain sufficient moisture for optimum results after being placed. The sod shall be watered and kept in a moist condition for no less than two weeks (minimum) or until the entire project is accepted by the Project Engineer and the County Engineer. The moistened condition shall extend at least to the full depth of the rooting zone. Water shall not be applied, however, when there is danger of a freezing condition.

Sec. 02.216. Staked Slit Fences: All materials and installation procedures shall be in accordance with the Florida Department of Transportation Standard Specifications for Road and Bridge Construction, current edition, and the State of Florida Department of Transportation Design Standards for Design, Construction, Maintenance and Utility Operations on the State Highway System, current edition.

Sec. 02.217. Temporary Prevention, Control, and Abatement of Erosion and Water Pollution: All materials and installations shall be in accordance with the Florida Department of Transportation Standard Specifications for Road and Bridge Construction, current edition, and constructed in accordance with the State of Florida Department of Transportation Design Standards for Design, Construction, Maintenance and Utility Operations on the State Highway System, current edition.

Sec. 02.218. Fencing: All materials shall be in accordance with the Florida Department of Transportation Standard Specifications for Road and Bridge Construction, current edition, and constructed in accordance with the State of Florida Department of Transportation Design Standards for Design, Construction, Maintenance and Utility Operations on the State Highway System, current edition.

Sec. 02.219. Guardrail: All materials shall be in accordance with the Florida Department of Transportation Standard Specifications for Road and Bridge Construction, current edition, and constructed in accordance with the State of Florida Department of Transportation Design Standards for Design, Construction, Maintenance and Utility Operations on the State Highway System, current edition.

Sec. 02.220. Concrete: All materials shall be in accordance with the Florida Department Standard Specifications for Road and Bridge Construction, current edition, and constructed in accordance with the State of Florida Department of Transportation Design Standards for Design, Construction, Maintenance and Utility Operations on the State Highway System, current edition.

Sec. 02.221. Field Engineering, Surveying and Right-of-Way Staking:

A. Field engineering and surveying services shall include survey work to establish right-of-way lines and levels and to locate and lay out site improvements, structures, and controlling lines and levels required for the construction of the work.Also included are such Engineering services as are specified or required to execute Contractor's construction methods. Engineers and Surveyors shall be licensed professionals in the State of Florida.

B. Existing basic horizontal and vertical control points for the project are those designated on the Drawings. Contractor shall locate and protect control points prior to starting site work and shall preserve all permanent reference points during construction. In working near any permanent property corners or reference markers, Contractor shall use care not to remove or disturb any such markers. In the event that markers must be removed or are disturbed due to proximity of the construction work, Contractor shall have them referenced and reset by a Land Surveyor qualified under the laws of the State of Florida.

C. Contractor shall lay out the work at the location and to the lines and grades shown on the Drawings. Survey notes indicating the information and measurements used in establishing locations and grades shall be kept in notebooks and copies furnished to Project Engineer. As a minimum the following items will be staked:
   1. Right-of-way, staked at each station or wherever the right-of-way changes width or direction, at any offset desired;
   2. Cut or fill to centerline grade and swale grade at each station or wherever changes occur at points of vertical intersection; and
   3. Set proposed centerline elevation of all intersecting roads one time and noted those elevations in field book; compare those elevations and bring any discrepancies to the attention of the Project Engineer.
   All the above mentioned survey work will be done by a Surveyor licensed to practice in the State of Florida.

Sec. 02.222. Obstructions in Right-of-Way:

A. Headwalls, fences, mail boxes, statues, walkways, and other obstructions placed in the right-of-way will be removed from the work area, as required to keep the work progressing, by the Contractor. In the event that the owner cannot be identified or is unable or unwilling to remove said obstructions themselves, the obstruction will be posted with a Notice, in Writing, by the Contractor 24 hours prior to any removal, that said object will be removed. The Contractor will not be responsible for any damage to said objects that occurs while being moved by the Contractor, after proper notification and the approval of the Project Engineer. Any objects that are removed from within the right-of-way, except mailboxes, will be hauled away and disposed of by the Contractor in a proper landfill.

B. Mailboxes moved during construction, will be replaced at a location 3 feet from the edge of pavement by the Contractor, providing the support pole is wood and less than 4 inches in diameter or is a breakaway type pole. If the original support pole is damaged or unsatisfactory, the Contractor will not be required to replace or relocate the mailbox.

Sec. 02.223. Shop Drawing Submittals: The following information and/or drawings shall be submitted to the Project Engineer prior to beginning work:

A. Information on the pipe and culverts, indicating the type, class, size, and other relevant information;
B. Asphalt mix design;
C. Documentation on all other materials used including, but not limited to, filter fabric, guardrails, concrete, steel posts, curing compound, and joint material;
D. Sample of tag for written notification of owners; and
E. Traffic plan (a drawing to scale of each phase showing all barricades, signs and flag men is required).

NOTES

Existing Ground Cover: Grass and Bushes

Owner to be responsible for Maintenance of retention areas, irrigation system, and plants

Volume of retention area meet the requirements of SWFWMD Chap.40D-4

Contractor to locate all underground utilities prior to any excavation (Call sunshine (800) 432-4770)

I hereby certify that the design for this project is in substantial conformance with the standards established by the 7-1-09 edition of the "Manual of Uniform Standards for Design, Construction and Maintenance of Street and Highways". as required by Florida Statue 336.045.

I hereby certify that the details of the handicap accessibility plan shown hereon are to the best of my knowledge and belief in full and complete compliance with the "State of Florida Department of Community Affairs Handicap Accessibility Rule".

Contractor shall install all slit fences and other temporary erosion control items called for in the plans prior to starting work on the site.

Contractor shall provide SWPPP plan and NPDES notice of intent.

All underground utilities within the roadway are to be installed prior to the placement of base.

All construction and planting in the non-access buffer easement are to be apart of the initial improvement.

This development is not within the 100yr flood plain.

Minimum floor elevation(s) of building(s) is not within any 100-year floodplain.

_____James "Mason" Cobb, P.E.

FOR PERMITTING PURPOSES ONLY

PROJECT
HOFFMAN & FACUNDO ARCHITECTS
RCMA HOPEWELL CAMPUS
1301 STRONG AVE
AVON PARK FL, 33825

THIS ITEM HAS BEEN ELECTRONICALLY SIGNED BY JAMES M COBB, PE ON 10/7/2022 USING A DIGITAL SIGNATURE
PRINTED COPIES OF THIS DOCUMENT ARE NOT CONSIDERED SIGNED AND SEALED AND THE SIGNATURE MUST BE VERIFIED ON ANY ELECTRONIC COPIES.

SEAL
Digitally signed by James M Cobb
Date: 2022.10.07 11:48:40 -04'00'
James "Mason" Cobb, P.E.
Friday, October 07, 2022

ENGINEERS
Florida License Numbers:
Carl E. Cool, P.E. -16921
James "Mason" Cobb, P.E. - 78600
Kenneth F. Wheeler P.E.- 60417
ken@coolandcobb.com
carl@coolandcobb.com
mason@coolandcobb.com

ENGINEERING FIRM
Cool and Cobb Engineering Company
203 West Main Street
Avon Park, FL 33825
(863) 657-2323 Office
(863) 657-2324 Fax

REVISIONS:
7/12/22 BW

PROJECT #22-269-2434

C-11

SHEET 12 of 12

S:\Project Files\2022 Projects\2022 Awarded Projects\22-269-2434- RCMA Hopewell Campus\Drawings\Civil\22-269-10722-Civil_site_Plan_Site_Plan_Time_Phased.dwg Notes Oct 07, 2022 9:26am by User